RMNC

PORTLAND STATE UNIVERSITY

RICHARD & MAURINE NEUBERGER CENTER - 4TH FLOOR - INTERIOR REMODEL
for the PSU - SPEECH & HEARING DEPARTMENT

SHEET INDEX

ARCHITECTURAL
A001 COVER
A002 CODE REVIEW
A003 4TH FLOOR - CODE DIAGRAM
A004 3RD FLOOR & SITE PLAN - FOR REFERENCE
A100 DEMOLITION FLOOR PLAN - HAZ MAT
A101 NORTH FLOOR PLAN - DEMO
A102 SOUTH FLOOR PLAN - DEMO
A110 OVERALL CEILING PLAN - DEMO
A111 CEILING PLAN NORTH - DEMO
A112 CEILING PLAN SOUTH - DEMO
A200 OVERALL 4TH FLOOR PLAN
A201 FLOOR PLAN NORTH
A202 FLOOR PLAN SOUTH
A203 FURNITURE PLAN NORTH
A204 FURNITURE PLAN SOUTH
A211 REFLECTED CEILING PLAN - NORTH
A212 REFLECTED CEILING PLAN - SOUTH
A213 LEVEL 3 - CEILING NEW WORK
A301 ENLARGED FLOOR PLANS
A302 ENLARGED FLOOR PLANS
A303 ENLARGED FLOOR PLANS
A304 ENLARGED FLOOR PLANS
A305 ENLARGED FLOOR PLANS
A306 ENLARGED CEILING PLANS
A307 ENLARGED CEILING PLANS
A401 DOOR & LITE ELEVATIONS DETAILS
A402 WALL TYPES
A403 SECTIONS
A501 INTERIOR ELEVATIONS
A502 INTERIOR ELEVATIONS
A503 INTERIOR ELEVATIONS
A504 INTERIOR ELEVATIONS
A601 DETAILS
A602 DETAILS
A603 DETAILS
A604 DETAILS
A605 DETAILS
A606 DETAILS
A607 DETAILS
A608 DETAILS
A609 DETAILS
A901 DOOR + LITE SCHEDULE

INTERIOR ARCHITECTURE
I1.00 DRAWING INDEX & GENERAL NOTES
I1.01 INTERIOR FINISH FLOOR PLAN - NORTH
I1.02 INTERIOR FINISH FLOOR PLAN - SOUTH
I1.11 TOILET TILE EXTENT PLANS AND TILE PATTERN
I1.12 TOILET TILE EXTENT PLANS AND TILE PATTERN
I3.01 INTERIOR ELEVATIONS - CLINIC
I3.02 INTERIOR ELEVATIONS - CLINIC
I3.03 INTERIOR ELEVATIONS - CLINIC
I3.04 INTERIOR ELEVATIONS - CLINIC
I3.05 INTERIOR ELEVATIONS - STUDENT LEARNING
I3.06 INTERIOR ELEVATIONS - STUDENT LEARING
I3.07 INTERIOR ELEVATIONS - ADMIN
I3.08 INTERIOR ELEVATIONS - ADMIN
I3.09 INTERIOR ELEVATIONS - ADMIN
I3.10 INTERIOR ELEVATIONS - ADMIN
I5.11 INTERIOR DETAILS
I5.12 INTERIOR DETAILS
I5.21 CASEWORK DETAILS
I5.22 CASEWORK DETAILS
I5.23 RECEPTION DESK CASEWORK DETAILS
I5.24 KITCHEN CASEWORK DETAILS
I6.01 ROOM FINISH SCHEDULE
I6.11 FINISH SCHEDULE
I6.12 FINISH SCHEDULE

STRUCTURAL
S100 GENERAL STRUCTURAL NOTES
S200 OVERALL STRUCTURAL FLOOR PLAN
S201 STRUCTURAL FLOOR PLAN - NORTH
S202 STRUCTURAL FLOOR PLAN - SOUTH
S301 SOUND BOOTH PLANS
S302 MECHANICAL DUCTS THROUGH STUD WALLS
S303 MECHANICAL DUCTS PENETRATIONS
S304 SEISMIC BRACING DETAILS
S305 SEISMIC BRACING DETAILS
S501 TYPICAL PARTITION WALL ELEVATIONS & DETAILS
S502 TYPICAL DETAILS
S503 TYPICAL DETAILS

MECHANICAL
M000 MECHANICAL LEGEND AND ABBREVIATIONS
M001 BASIS OF DESIGN AND TABULATED DATA
M002 SCHEDULES
M003 CALCULATIONS
M140 LEVEL 4 - OVERALL DEMO PLAN - HVAC
M141 LEVEL 4 - DEMO PLAN - HVAC ADD ALTERNATE
M230 LEVEL 3 - OVERALL FLOOR PLAN - HVAC
M240 LEVEL 4 - OVERALL FLOOR PLAN - HVAC
M241 LEVEL 4 - NORTH FLOOR PLAN - HVAC
M242 LEVEL 4 - SOUTH FLOOR PLAN - HVAC
M340 LEVEL 4 - OVERALL FLOOR PLAN - ZONING
M500 MECHANICAL SYSTEM SECTION VIEWS
M800 CONTROLS - SCHEMATICS
M801 CONTROLS - SEQUENCES OF OPERATION
M900 MECHANICAL DETAILS
M901 MECHANICAL DETAILS

PLUMBING
P000 PLUMBING LEGEND AND ABBREVIATIONS
P002 BASIS OF DESIGN AND SCHEDULES
P140 LEVEL 4 - OVERALL DEMO PLAN - PLUMBING
P230 LEVEL 3 - OVERALL FLOOR PLAN - PLUMBING
P240 LEVEL 4 - OVERALL FLOOR PLAN - PLUMBING
P241 LEVEL 4 - NORTH FLOOR PLAN - PLUMBING
P242 LEVEL 4 - SOUTH FLOOR PLAN - PLUMBING

ELECTRICAL
E001 SYMBOLS, LEGEND, & ABBREVIATIONS
E002 SPECIFICATIONS
E003 EQUIPMENT & LIGHTING SCHEDULES
E004 LIGHTING SOO
E100 POWER & DATA 3RD FLOOR DEMO PLAN
E101 POWER & DATA 4TH FLR NORTH DEMO PLAN
E102 POWER & DATA 4TH FLR SOUTH DEMO PLAN
E111 LIGHTING 4TH FLR NORTH DEMO PLAN
E112 LIGHTING 4TH FLR SOUTH DEMO PLAN
E200 POWER & DATA 3RD FLOOR INSTALL PLAN
E201 POWER & DATA 4TH FLR NORTH INSTALL PLAN
E202 POWER & DATA 4TH FLR SOUTH INSTALL PLAN
E203 ACCESS CONTROL 4TH FLOOR
E211 LIGHTING 4TH FLR NORTH INSTALL PLAN
E212 LIGHTING 4TH FLR SOUTH INSTALL PLAN
E300 ONE-LINE DIAGRAM DEMO
E301 ONE-LINE DIAGRAM INSTALL
E400 PANEL SCHEDULES DEMO
E401 PANEL SCHEDULES DEMO
E402 PANEL SCHEDULES INSTALL
E403 PANEL SCHEDULES INSTALL
E500 DETAILS

PROJECT LOCATION - VICINITY MAP

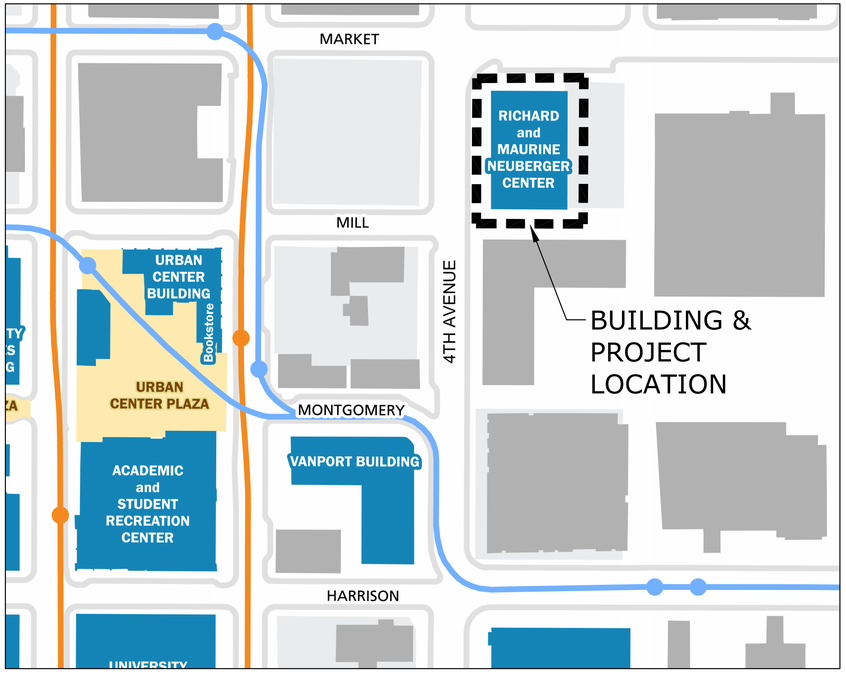

PROJECT CONTACTS

PROJECT MANAGEMENT
PSU - CAPITAL PROJECTS & CONSTRUCTION
617 SW MONTGOMERY STREET - Suite 302
PORTLAND, OR 97201

QUINN SOIFER, PE - CPC DIRECTOR
STEVE ROUNDS - CPC ASST. DIRECTOR
CARRIE FICEK - CPC PROJECT MANAGER

ARCHITECTURAL
PSU CPC - IN HOUSE DESIGN

GERALD GOTSCHALL, AIA - LEAD ARCHITECT
NATALIE REEDER - DRAFTER/DESIGNER

INTERIOR ARCHITECTURE
BASSETTI ARCHITECTS
Portland Office
721 NW 9th Ave - Suite 350
Portland, OR 97209
T. 503 224 9162

STRUCTURAL
NBZ | CONSULTING ENGINEERS
21617 SW Susan Lane
Beaverton, OR 97003

ACOUSTICAL CONSULTANTS
THE GREENBUSCH GROUP, INC.
Vancouver, WA
T. 206.378.0569

MECHANICAL + PLUMBING
GLUMAC - a Tetra Tech Company
900 SW Fifth Ave - Suite 1600
Portland, OR 97204
T. 503.227.5280
Project Manager: Paul Hallowell

ELECTRICAL
PSU CPC - IN HOUSE DESIGN
JOSEPH WUEST, PE - LEAD ELECTRICAL ENGINEER

SITE PHOTO



Portland State UNIVERSITY

PSU CAPITAL PROJECTS & CONSTRUCTION

RMNC

RICHARD & MAURINE NEUBERGER CENTER

4TH FLOOR SPHR
INTERIOR REMODEL

PSU CAMPUS | BLOCK: 087
1600 SW 4TH AVENUE
PORTLAND, OREGON 97201

REGISTERED ARCHITECT
ARI-11654
GERALD R GOTSCHALL
PORTLAND, OREGON
STATE OF OREGON

Exp. 12/31/2026

ISSUED FOR BID & PERMIT

9/4/2026

HALF SIZE WHEN PRINTED AT 11X17

Sheet Title :
COVER

Revisions :	Date :
*	2026

Drawn : NR Checked : GRG

Sheet # : **A001**

CODE SUMMARY

RICHARD & MAURINE NEUBERGER CENTER (RMNC) BUILDING

1600 SW 4TH AVENUE, Portland, OR

Note: There will be a single tenant / occupant group on the 4th floor following this construction project. Tenant is a PSU - University related tenant (Speech & Hearing Dept.)

Reference Building Code:
Updated to 2025 OSSC - Oregon Structural Specialty Code (Effective: Oct. 1, 2025)

(Based on 2024 Edition of IBC)

Year Originally Built: 1968

Gross Building Area: 187,800 gross SF. ~13,800.sf per Office Floor (4th floor)

Building Construction Type: Type I-A (Section 603) [Orig. Type I-FR]

Building Occupancy Type: (Table 3a & 10a) 4th floor

Primary Occupancy: B-Business, Secondary: A-Assembly

B	Offices: 150 occ/SF	
B	Classrooms: 20 occ/SF (Above K-12 use)	
A	Meeting Rooms: 15 occ/SF	

Building Construction: Type I-A Construction (Table 601)

Primary Structural frame	3 hour	
Exterior Bearing Walls	3 hour	
Interior Bearing Walls	3 hour	
Exterior Non-bearing Walls	1 hour <5 ft.	(Table 705.5)
	1 hour @ 5-10 ft.	
	1 hour @ 10-30 ft.	
	0 hour, NR >30 ft.	
Nonbearing Interior Walls	0 hour	
Shaft Enclosures	2 hour	(Section 713, 707.5 Fire Barriers)
Floor / Ceiling	2 hour	
Roof Construction	1-1/2 hour	

Building Areas / Fire Sprinklers

Level	Gross Area SF	Sprinklered
(Penthouse, Mech	6,000	yes)
9th floor	13,800	yes
8th floor	13,800	yes
7th floor	13,800	yes
6th floor	13,800	yes
5th floor	13,800	yes
4th floor	13,800	yes
3rd floor	13,800	yes
2nd floor	13,800	yes
1st floor	12,160	yes
B1 - Basement	1,980	yes
Parking	31,890	yes
B2 - Basement	3,800	yes
Parking	30,070	yes
B3 - Basement	3,660	yes
Grand Total =	187,800.sf	

New Door Assemblies and Hardware:

A. Panic and fire exit hardware. (Section 1010.2.9) Required only in Group A or E, with Occ Load over 49, shall have panic or fire exit hardware. Large lecture rooms with occ load over 49 in this project shall have Fire Exit hardware because they are considered Group A areas with fixed seats,

B. All new doors shall be provided with ADA accessible lever hardware. Clearances at doors shall meet ADA clearances.

Horizontal Assemblies:

Floor-ceiling assembly penetrations be fire rated construction, sealed to meet fire rating of concrete floor construction.

Existing Conditions:

Existing door assemblies, door hardware, walls, ceilings, horizontal assemblies, are acceptable as is existing unless altered.

RESTROOMS:

EXISTING: Fixtures on 4th floor, (7.33) WC fixtures (includes 2 urinals in Mens RR: 2/3 per unit)

NEW / ADD: Fixtures on 4th floor, (2) WC fixtures , (2) Lavs

TOTAL Fixtures 4th floor: (9.33) WC fixtures

Required: (7) WC fixtures (Table 2902.1)

Portland State UNIVERSITY

PSU CAPITAL PROJECTS & CONSTRUCTION

RMNC

RICHARD & MAURINE NEUBERGER CENTER

4TH FLOOR SPHR
INTERIOR REMODEL

PSU CAMPUS | BLOCK: 087
1600 SW 4TH AVENUE
PORTLAND, OREGON 97201

REGISTERED ARCHITECT
ARI-11654
GERALD R GOTSCHALL
PORTLAND, OREGON
STATE OF OREGON

Exp. 12/31/2026

ISSUED FOR BID & PERMIT

9/4/2026

HALF SIZE WHEN PRINTED AT 11X17

Sheet Title :

CODE SUMMARY NARRATIVE

Revisions : *

Date : 2026

Drawn : NR

Checked : GRG

Sheet # : **A002**

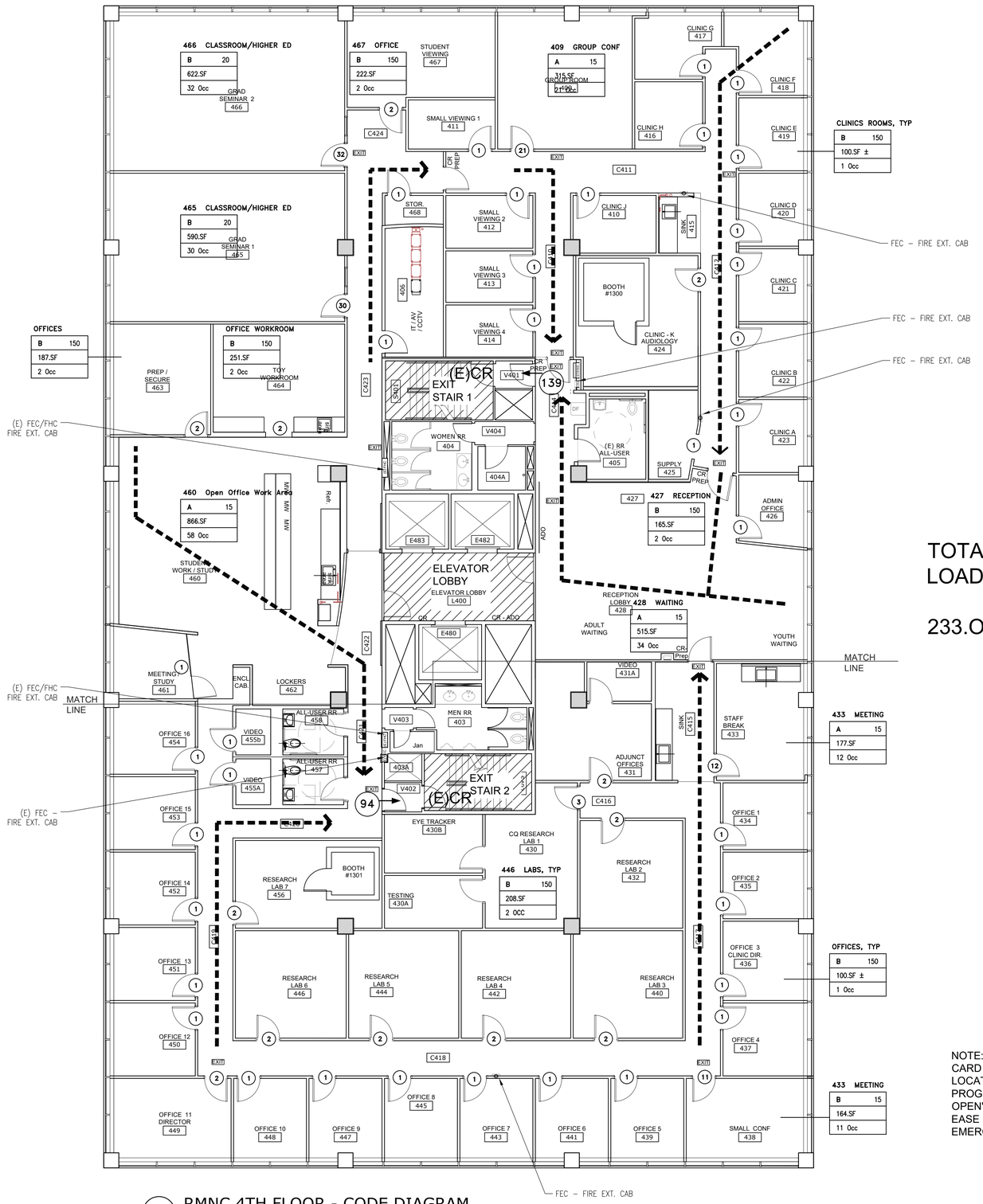

1 RMNC 4TH FLOOR - CODE DIAGRAM
1/8" = 1'-0"

TOTAL OCCUPANT LOAD, 4TH FLOOR:

233.OCC

NOTE:
CARD READERS IN EACH LOCATION SHALL BE PROGRAMMED TO 'FAIL OPEN' WITH AN ALARM, FOR EASE OF EXITING IN AN EMERGENCY

Portland State UNIVERSITY
PSU CAPITAL PROJECTS & CONSTRUCTION

RMNC
RICHARD & MAURINE NEUBERGER CENTER

4TH FLOOR SPHR
INTERIOR REMODEL

PSU CAMPUS | BLOCK: 087
1600 SW 4TH AVENUE
PORTLAND, OREGON 97201

REGISTERED ARCHITECT
ARI-11654
GERALD R GOTSCHALL
PORTLAND, OREGON
STATE OF OREGON
Exp. 12/31/2026

ISSUED FOR BID & PERMIT

9/4/2026

HALF SIZE WHEN PRINTED AT 11X17

Sheet Title :
4TH FLOOR PLAN - CODE DIAGRAM

Revisions : *
Date : 2026

Drawn : NR
Checked : GRG

Sheet # :
A003

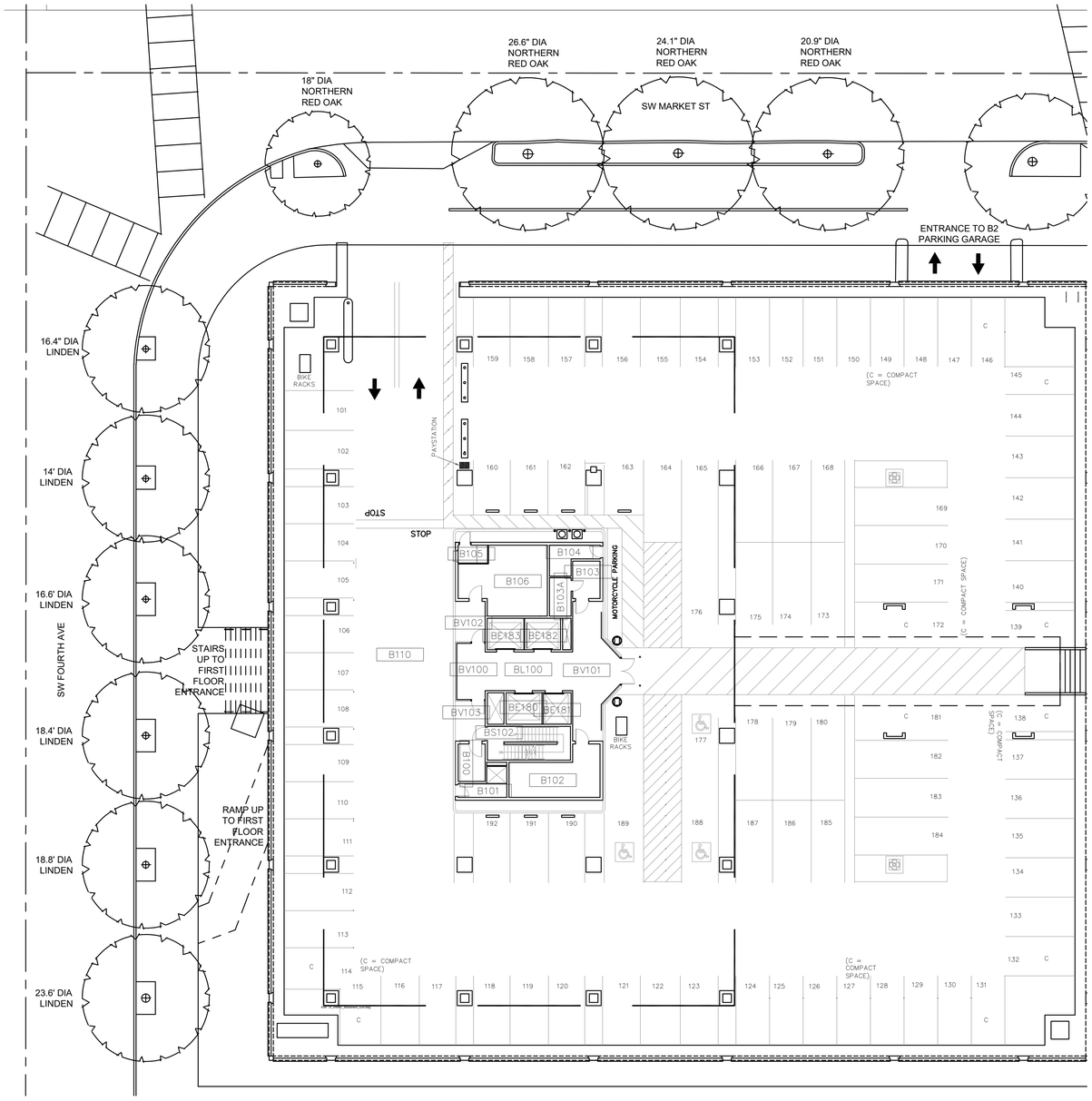

1 RMNC - SITE & B-1 FLOOR PLAN - EXISTING
1/16" = 1'-0"

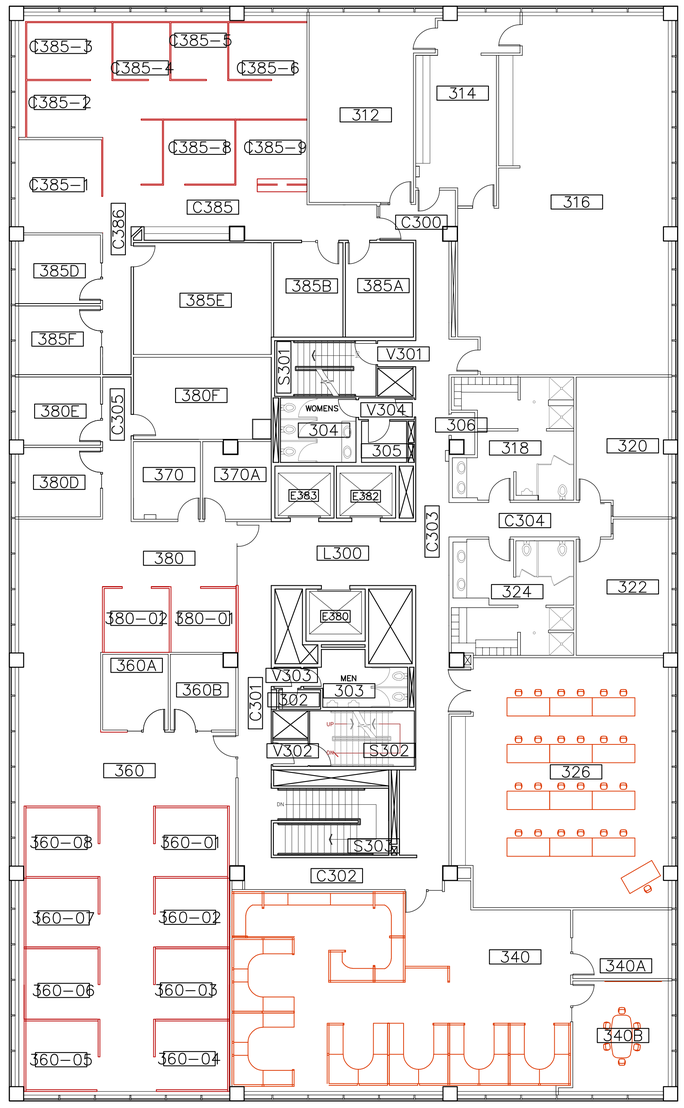

2 RMNC 3RD FLOOR FLOOR PLAN - EXISTING
3/32" = 1'-0"

NOTE: ADJACENT FLOOR PLANS INCLUDED FOR REFERENCE ONLY

Portland State UNIVERSITY

PSU CAPITAL PROJECTS & CONSTRUCTION

RMNC

RICHARD & MAURINE NEUBERGER CENTER

4TH FLOOR SPHR
INTERIOR REMODEL

PSU CAMPUS | BLOCK: 087
1600 SW 4TH AVENUE
PORTLAND, OREGON 97201

REGISTERED ARCHITECT
ARI-11654
GERALD R GOTSCHALL
PORTLAND, OREGON
STATE OF OREGON
Exp. 12/31/2026

ISSUED FOR BID & PERMIT

9/4/2026

HALF SIZE WHEN PRINTED AT 11X17

Sheet Title :

3rd FLOOR PLAN & SITE PLAN FOR REFERENCE

Revisions :	Date :
*	2026

Drawn : NR Checked : GRG

Sheet # : **A004**

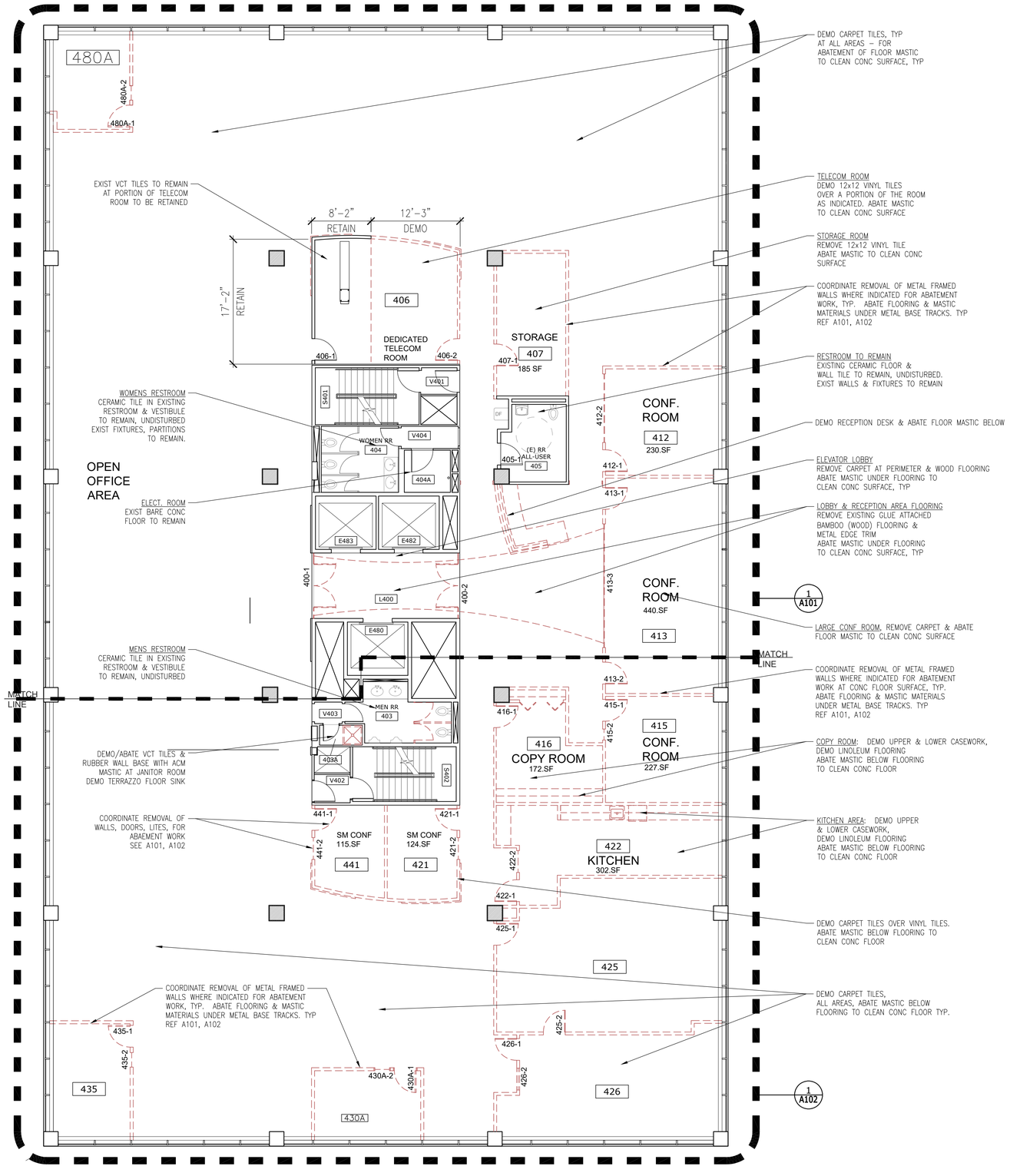

1 4TH FLOOR OVERALL FLOOR PLAN - DEMO
1/8" = 1'-0"

DEMO NOTES

1. NO DEMO WORK AT STAIRS OR STAIR VESTIBULES. (S401, V401, S402, V402)
2. NO DEMO WORK OR DISTURBANCE SHALL BE DONE, NOR IS IT ANTICIPATED ON THIS PROJECT, TO ELEVATORS, CABS, HALL LAMPS, ELEVATOR THRESHOLDS, OR OTHER ELEVATOR RELATED ACCESSORIES.
3. REMOVE OR SALVAGE DOORS, FRAMES & GLASS LITES AS SCHEDULED, SEE SHEET A101 & A102.
4. FOR CEILING DEMO WORK, SEE A111 & A112. CEILING SUSPENDED ACOUSTICAL TILES & METAL GRID AND GWB SOFFITS SHALL BE REMOVED TO REMOVE & ABATE DUCTWORK & INSULATION ABOVE CEILING.
5. COORDINATE REMOVAL OF CEILING MOUNTED MECH, ELECTRICAL & OTHER ACCESSORIES PRIOR TO ABATEMENT, SEE SHEETS A111 & A112.
6. COORDINATE & PROTECT EXISTING SPRINKLER SYSTEM & FIRE ALARM / DETECTION SYSTEM DURING DEMO & ABATEMENT. COORDINATE WITH PSU FACILITIES STAFF FOR ANY IMPAIRMENTS OR DISRUPTION TO FIRE LIFE SAFETY SYSTEMS.
7. REFERENCE MECHANICAL FOR EXTENT OF DUCTWORK TO BE REMOVED AT CEILING. ABATEMENT WILL BE REQUIRED AT DUCTWORK, SEE ABATEMENT REPORTS FOR TYPE OF MASTIC, TAPE & INSULATION TO BE ABATED.
8. REFERENCE PLUMBING FOR EXTENT OF PIPING TO BE REMOVED AT 4TH FLOOR & 3RD FLOOR CEILING, BELOW. ABATEMENT WILL BE REQUIRED AT SELECT AREAS FOR PLUMBING, SEE ABATEMENT REPORTS FOR TYPE OF INSULATION, MASTIC, OTHER MATERIALS ANTICIPATED AROUND EXISTING PIPING.
9. SEE A213 FOR PIPING & CEILING DEMO WORK ON 3RD FLOOR.
10. COORDINATE REMOVAL OF METAL FRAMED WALLS WHERE INDICATED FOR ABATEMENT WORK, TYP.
11. ABATEMENT: ABATE FLOORING & MASTIC MATERIALS UNDER METAL BASE TRACKS. TYP. REF A101, A102
12. DEMO WALLS & BRACING FULL HEIGHT TO CONCRETE SLAB ABOVE.
13. ABATEMENT: SEE RECENT ACM TEST REPORTS PROVIDED BY PSU / OWNER PM AS REFERENCE FOR TYPE & EXTENT OF ACM MATERIALS IDENTIFIED WITHIN THIS PROJECT'S BOUNDARIES.
14. ABATEMENT: EXISTING ELECTRICAL ROOM (404A), ENCAPSULATE MASTIC JOINTS ON EXISTING CEILING DUCTWORK TO REMAIN. LABEL WITH STICKERS INDICATING MATERIALS UNDER ENCAPSULATING TAPE IS ACM CONTAINING MATERIALS. COORDINATE LABELS WITH PSU / OWNER PM.

Portland State UNIVERSITY
PSU CAPITAL PROJECTS & CONSTRUCTION

RMNC
RICHARD & MAURINE NEUBERGER CENTER

4TH FLOOR SPHR
INTERIOR REMODEL

PSU CAMPUS | BLOCK: 087
1600 SW 4TH AVENUE
PORTLAND, OREGON 97201

REGISTERED ARCHITECT
ARI-11654
GERALD R GOTSCHALL
PORTLAND, OREGON
STATE OF OREGON
Exp. 12/31/2026

ISSUED FOR BID & PERMIT

9/4/2026
HALF SIZE WHEN PRINTED AT 11X17

Sheet Title :
DEMOLITION FLOOR PLAN - HAZ MAT

Revisions :	Date :
*	2026

Drawn : NR Checked : GRG

Sheet # : **A100**

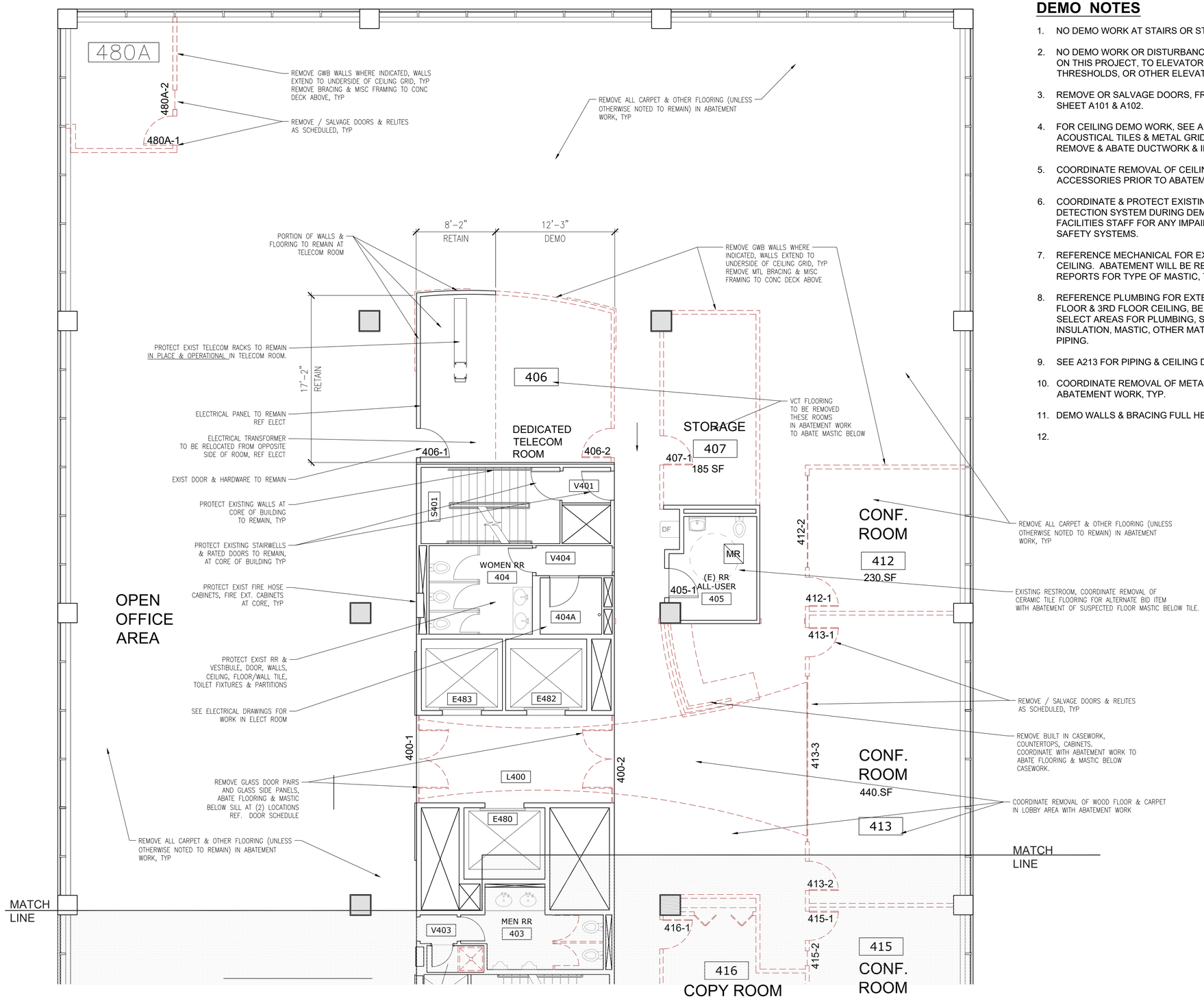

1 4TH FLOOR PLAN - NORTH - DEMO
3/16" = 1'-0"

DEMO NOTES

1. NO DEMO WORK AT STAIRS OR STAIR VESTIBULES. (S401, V401, S402, V402)
2. NO DEMO WORK OR DISTURBANCE SHALL BE DONE, NOR IS IT ANTICIPATED ON THIS PROJECT, TO ELEVATORS, CABS, HALL LAMPS, ELEVATOR THRESHOLDS, OR OTHER ELEVATOR RELATED ACCESSORIES.
3. REMOVE OR SALVAGE DOORS, FRAMES & GLASS LITES AS SCHEDULED, SEE SHEET A101 & A102.
4. FOR CEILING DEMO WORK, SEE A111 & A112. CEILING SUSPENDED ACOUSTICAL TILES & METAL GRID AND GWB SOFFITS SHALL BE REMOVED TO REMOVE & ABATE DUCTWORK & INSULATION ABOVE CEILING.
5. COORDINATE REMOVAL OF CEILING MOUNTED MECH, ELECTRICAL & OTHER ACCESSORIES PRIOR TO ABATEMENT, SEE SHEETS A111 & A112.
6. COORDINATE & PROTECT EXISTING SPRINKLER SYSTEM & FIRE ALARM / DETECTION SYSTEM DURING DEMO & ABATEMENT. COORDINATE WITH PSU FACILITIES STAFF FOR ANY IMPAIRMENTS OR DISRUPTION TO FIRE LIFE SAFETY SYSTEMS.
7. REFERENCE MECHANICAL FOR EXTENT OF DUCTWORK TO BE REMOVED AT CEILING. ABATEMENT WILL BE REQUIRED AT DUCTWORK, SEE ABATEMENT REPORTS FOR TYPE OF MASTIC, TAPE & INSULATION TO BE ABATED.
8. REFERENCE PLUMBING FOR EXTENT OF PIPING TO BE REMOVED AT 4TH FLOOR & 3RD FLOOR CEILING, BELOW. ABATEMENT WILL BE REQUIRED AT SELECT AREAS FOR PLUMBING, SEE ABATEMENT REPORTS FOR TYPE OF INSULATION, MASTIC, OTHER MATERIALS ANTICIPATED AROUND EXISTING PIPING.
9. SEE A213 FOR PIPING & CEILING DEMO WORK ON 3RD FLOOR.
10. COORDINATE REMOVAL OF METAL FRAMED WALLS WHERE INDICATED FOR ABATEMENT WORK, TYP.
11. DEMO WALLS & BRACING FULL HEIGHT TO CONCRETE SLAB ABOVE.
12.

Portland State UNIVERSITY
PSU CAPITAL PROJECTS & CONSTRUCTION

RMNC
RICHARD & MAURINE NEUBERGER CENTER

4TH FLOOR SPHR
INTERIOR REMODEL

PSU CAMPUS | BLOCK: 087
1600 SW 4TH AVENUE
PORTLAND, OREGON 97201

REGISTERED ARCHITECT
ARI-11654
GERALD R GOTSCHALL
PORTLAND, OREGON
STATE OF OREGON
Exp. 12/31/2026

ISSUED FOR BID & PERMIT

9/4/2026
HALF SIZE WHEN PRINTED AT 11X17

Sheet Title :
NORTH FLOOR PLAN - DEMOLITION

Revisions :	Date :
*	2026

Drawn : NR Checked : GRG

Sheet # : **A101**

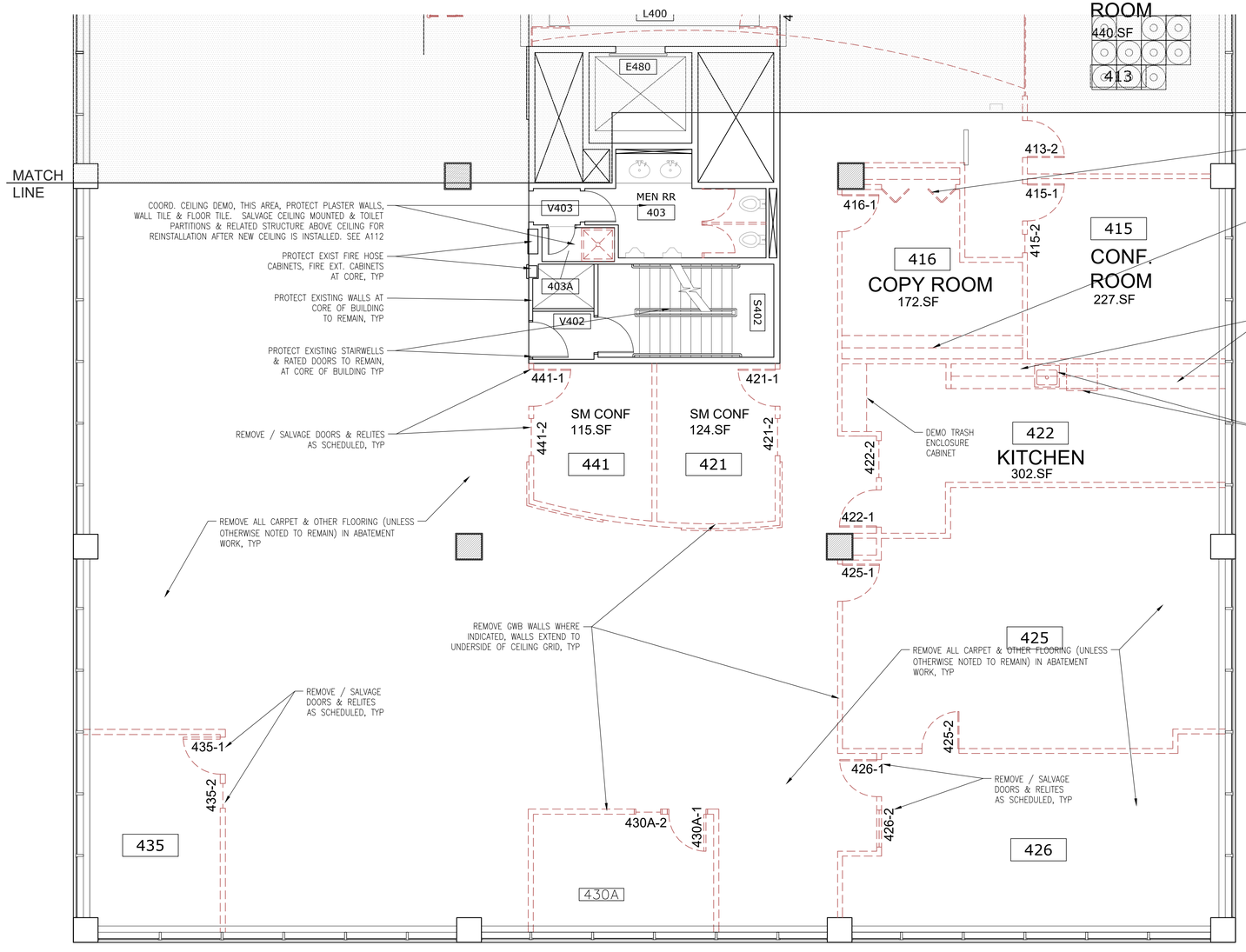

1 4TH FLOOR SOUTH FLOOR PLAN - DEMO
3/16" = 1'-0"

DEMO NOTES

1. NO DEMO WORK AT STAIRS OR STAIR VESTIBULES. (S401, V401, S402, V402)
2. NO DEMO WORK OR DISTURBANCE SHALL BE DONE, NOR IS IT ANTICIPATED ON THIS PROJECT, TO ELEVATORS, CABS, HALL LAMPS, ELEVATOR THRESHOLDS, OR OTHER ELEVATOR RELATED ACCESSORIES.
3. REMOVE OR SALVAGE DOORS, FRAMES & GLASS LITES AS SCHEDULED, SEE SHEET A101 & A102.
4. FOR CEILING DEMO WORK, SEE A111 & A112. CEILING SUSPENDED ACOUSTICAL TILES & METAL GRID AND GWB SOFFITS SHALL BE REMOVED TO REMOVE & ABATE DUCTWORK & INSULATION ABOVE CEILING.
5. COORDINATE REMOVAL OF CEILING MOUNTED MECH, ELECTRICAL & OTHER ACCESSORIES PRIOR TO ABATEMENT, SEE SHEETS A111 & A112.
6. COORDINATE & PROTECT EXISTING SPRINKLER SYSTEM & FIRE ALARM / DETECTION SYSTEM DURING DEMO & ABATEMENT. COORDINATE WITH PSU FACILITIES STAFF FOR ANY IMPAIRMENTS OR DISRUPTION TO FIRE LIFE SAFETY SYSTEMS.
7. REFERENCE MECHANICAL FOR EXTENT OF DUCTWORK TO BE REMOVED AT CEILING. ABATEMENT WILL BE REQUIRED AT DUCTWORK, SEE ABATEMENT REPORTS FOR TYPE OF MASTIC, TAPE & INSULATION TO BE ABATED.
8. REFERENCE PLUMBING FOR EXTENT OF PIPING TO BE REMOVED AT 4TH FLOOR & 3RD FLOOR CEILING, BELOW. ABATEMENT WILL BE REQUIRED AT SELECT AREAS FOR PLUMBING, SEE ABATEMENT REPORTS FOR TYPE OF INSULATION, MASTIC, OTHER MATERIALS ANTICIPATED AROUND EXISTING PIPING.
9. SEE A213 FOR PIPING & CEILING DEMO WORK ON 3RD FLOOR.
10. COORDINATE REMOVAL OF METAL FRAMED WALLS WHERE INDICATED FOR ABATEMENT WORK, TYP. REMOVE BASE TRACK IN ABATEMENT WORK WITH FLOOR MASTIC.
11. DEMO WALLS & BRACING FULL HEIGHT TO CONCRETE SLAB ABOVE, TYP.

Portland State UNIVERSITY
PSU CAPITAL PROJECTS & CONSTRUCTION

RMNC
RICHARD & MAURINE NEUBERGER CENTER

4TH FLOOR SPHR
INTERIOR REMODEL

PSU CAMPUS | BLOCK: 087
1600 SW 4TH AVENUE
PORTLAND, OREGON 97201

REGISTERED ARCHITECT
ARI-11654
GERALD R GOTSCHALL
PORTLAND, OREGON
STATE OF OREGON
Exp. 12/31/2026

ISSUED FOR BID & PERMIT

9/4/2026
HALF SIZE WHEN PRINTED AT 11X17

Sheet Title :
SOUTH FLOOR PLAN - DEMOLITION

Revisions : *
Date : 2026

Drawn : NR
Checked : GRG

Sheet # : **A102**

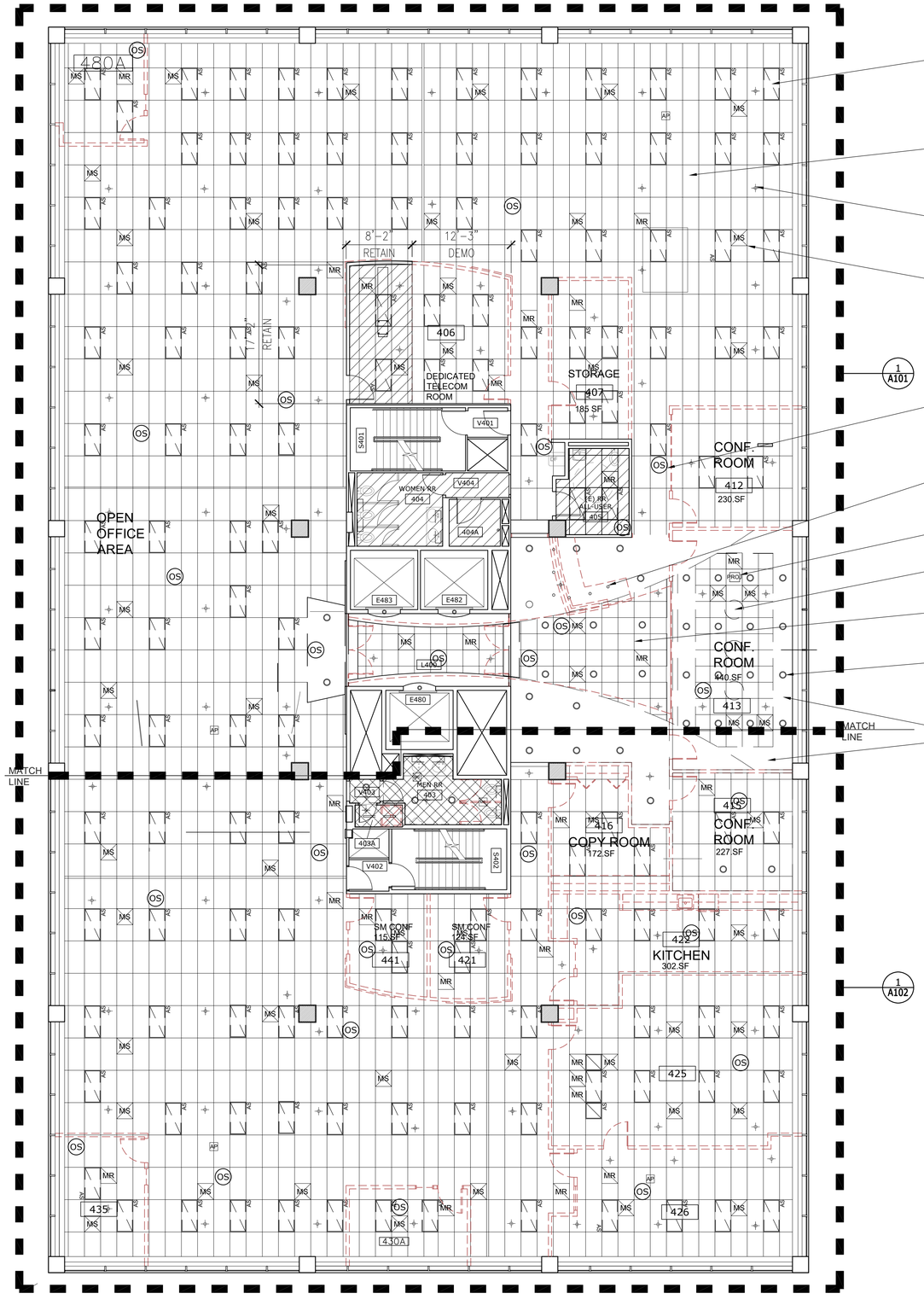

DEMO LIGHT FIXTURES REF ELECT FOR SALVAGE OF EXIST FIXTURES, IF ANY

DEMO SUSPENDED 2X4 CEILING TILES and METAL GRID, TYP @ FULL FLOOR, UNO

PROTECT ALL SPRINKLER HEADS DURING DEMOLITION ACTIVITIES. EXISTING SYSTEM TO BE RECONFIGURED FOR NEW ROOM LAYOUTS

MECH SUPPLY & RETURN GRILLES TO BE REMOVED WITH CEILING DEMO, REF MECH

DEMO OCCUPANCY SENSORS RELATING TO LIGHTING SYSTEM REF ELECT

DEMO SUSPENDED CEILING LIGHT FIXTURES OVER DESK, REF ELECT

DEMO A/V, PROJECTOR SYSTEMS REF ELECT

DEMO (3) SUSPENDED LIGHT FIXTURES, REF ELECT

SALVAGE TO OWNER ALL SMOKE/FIRE ALARM SENSORS AND STROBES, TYP REF ELECT

DEMO RECESSED CAN LIGHT FIXTURES & LED BULBS, TYP REF ELECT

DEMO GYPSUM BOARD & METAL FRAMED SOFFITS, TYP

1 4TH FLOOR OVERALL FLOOR PLAN - CEILING - DEMO
1/8" = 1'-0"

DEMO NOTES

1. NO DEMO WORK AT STAIRS OR STAIR VESTIBULES. (S401, V401, S402, V402)
2. NO DEMO WORK OR DISTURBANCE SHALL BE DONE, NOR IS IT ANTICIPATED ON THIS PROJECT, TO ELEVATORS, CABS, HALL LAMPS, ELEVATOR THRESHOLDS, OR OTHER ELEVATOR RELATED ACCESSORIES.
3. DEMO SUSPENDED ACOUSTICAL CEILING TILES & METAL GRID AND GWB SOFFITS TO REMOVE & ABATE DUCTWORK & INSULATION ABOVE CEILING.
4. COORDINATE REMOVAL, DEMO OR SALVAGE OF CEILING MOUNTED MECH, ELECTRICAL & OTHER ACCESSORIES PRIOR TO ABATEMENT.
   - 4.1. REFERENCE ELECTRICAL DRAWINGS FOR EXTENT OF LIGHT FIXTURES TO BE SALVAGED, IF ANY.
   - 4.2. DEMO MECHANICAL CEILING GRILLES IN SUSPENDED GRID, REF MECH DRAWINGS FOR ANY MECH GRILLES TO BE SALVAGED, IF ANY.
   - 4.3. DEMO / SALVAGE CEILING MOUNTED THERMOSTATS, COORD WITH MECH DRAWINGS
   - 4.4. DEMO / SALVAGE ALL CEILING MOUNTED WIRELESS (AP) ACCESS POINT UNITS (FOR WIFI), SALVAGE TO OWNER
   - 4.5. DEMO / SALVAGE TO OWNER ALL OCCUPANCY SENSORS
   - 4.6. DEMO / SALVAGE TO OWNER CEILING MOUNTED EXIT SIGNS
5. SALVAGE TO OWNER ALL FIRE ALARM / DETECTION SYSTEM ACCESSORIES. COORDINATE WITH PSU FACILITIES STAFF TO KEEP SYSTEM IN OPERATION DURING DEMO & CONSTRUCTION WORK.
6. COORDINATE & PROTECT EXISTING SPRINKLER SYSTEM DURING DEMO & ABATEMENT. COORDINATE WITH PSU FACILITIES STAFF & PSU PM IN ADVANCE FOR ANY IMPAIRMENTS OR DISRUPTION TO FIRE LIFE SAFETY SYSTEMS.
7. REFERENCE MECHANICAL FOR EXTENT OF DUCTWORK TO BE REMOVED AT CEILING. ABATEMENT WILL BE REQUIRED AT DUCTWORK, SEE ABATEMENT REPORTS FOR TYPE OF MASTIC, TAPE & INSULATION TO BE ABATED.
8. REFERENCE PLUMBING FOR EXTENT OF PIPING ABOVE CEILING TO BE REMOVED AT 4TH FLOOR & 3RD FLOOR CEILING, BELOW. ABATEMENT WILL BE REQUIRED AT SELECT AREAS FOR PLUMBING, SEE ABATEMENT REPORTS FOR TYPE OF INSULATION, MASTIC, OTHER MATERIALS ANTICIPATED AROUND EXISTING PIPING.
9. SEE A213 FOR PIPING & CEILING DEMO WORK ON 3RD FLOOR.
10. COORDINATE REMOVAL OF METAL FRAMED WALLS TO UNDERSIDE OF CEILING & BRACING ABOVE CEILING WHERE INDICATED FOR ABATEMENT WORK, TYP.
11. DEMO WALLS & BRACING FULL HEIGHT TO CONCRETE SLAB ABOVE.
12. DEMO PLASTER CEILINGS AT MENS RESTROOM, JANITOR ROOM, VESTIBULE FOR MECHANICAL DEMO & NEW WORK. PLASTER WALLS, WALL TILE & FLOOR TILE TO REMAIN. PROTECT TOILET FIXTURES & ACCESSORIES. SALVAGE CEILING-MOUNTED TOILET PARTITIONS & RELATED SUPPORT STRUCTURE ABOVE CEILING FOR REINSTALL.

KEY

- EXISTING TO REMAIN
- PLASTER CEILING DEMO

SYMBOLS

- MS — MECHANICAL SUPPLY VENT
- MR — MECHANICAL RETURN VENT
- AP — WIRELESS ACCESS POINT
- F — FIRE ALARM, HORN STROBE
- SPRINKLER HEAD
- OS — LIGHT SENSOR, OCC.
- S — SMOKE SENSOR
- H — HEAT SENSOR
- AS — EXIST LIGHT FIXTURE
- BN — LIGHT FIXTURE
- LIGHT FIXTURE
- LIGHT FIXTURE - SMALL CAN or PENDANT
- LARGE PENDANT FIXTURE
- EXIT — EXIT SIGN, ILLUMINATED FIXTURE

Portland State UNIVERSITY
PSU CAPITAL PROJECTS & CONSTRUCTION

RMNC
RICHARD & MAURINE NEUBERGER CENTER

4TH FLOOR SPHR
INTERIOR REMODEL

PSU CAMPUS | BLOCK: 087
1600 SW 4TH AVENUE
PORTLAND, OREGON 97201

REGISTERED ARCHITECT
ARI-11654
GERALD R GOTSCHALL
PORTLAND, OREGON
STATE OF OREGON
Exp. 12/31/2026

ISSUED FOR BID & PERMIT

9/4/2026
HALF SIZE WHEN PRINTED AT 11X17

Sheet Title :
OVERALL CEILING PLAN - DEMOLITION

Revisions : *
Date : 2026

Drawn : NR
Checked : GRG

Sheet # : **A110**

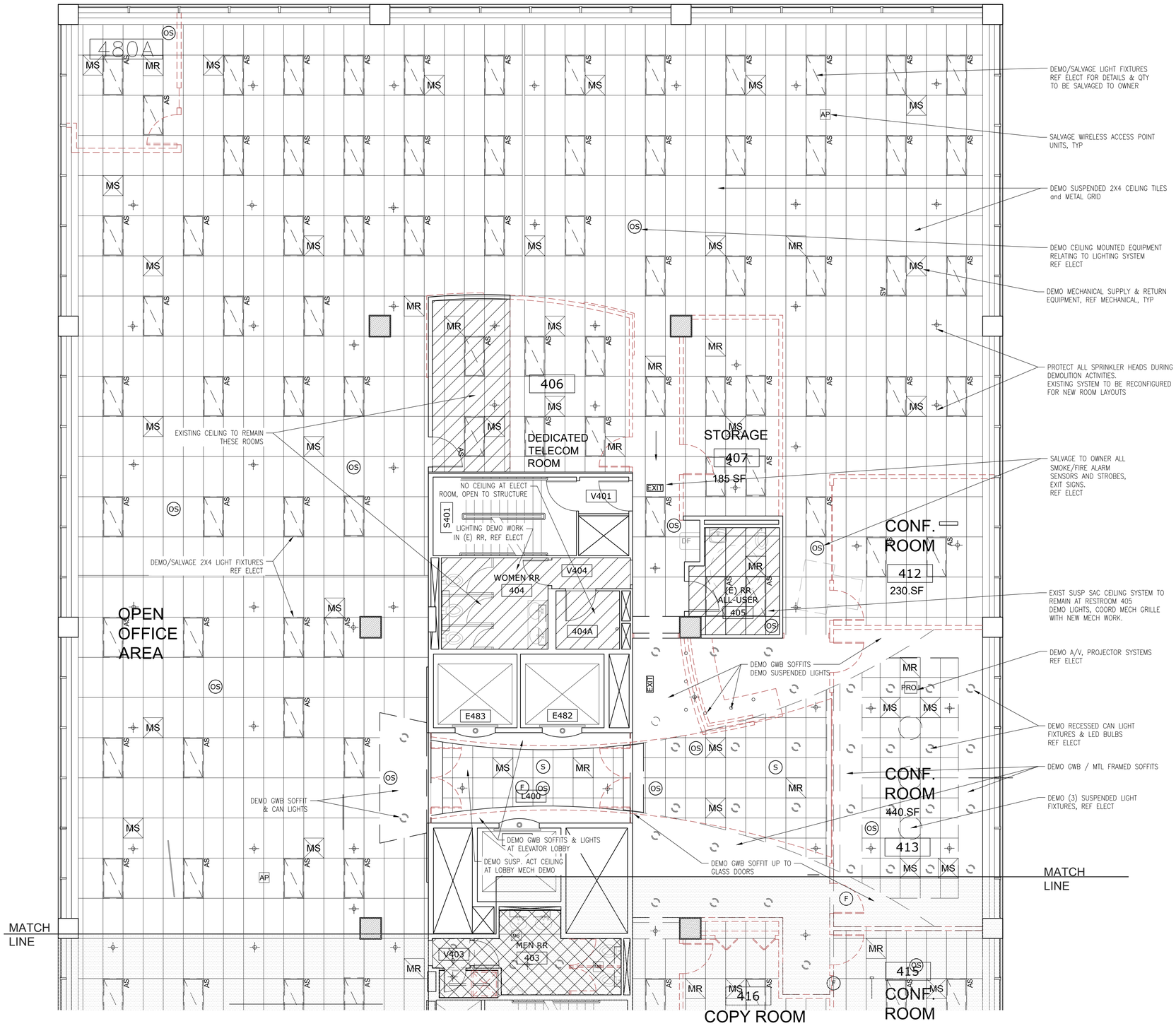

1 4TH FLOOR NORTH FLOOR PLAN - CEILING - DEMO
3/16" = 1'-0"

DEMO NOTES

SEE GENERAL DEMOLITION & ABATEMENT NOTES (A112) THAT APPLY TO THIS SHEET.

SYMBOLS

- MS — MECHANICAL SUPPLY VENT
- MR — MECHANICAL RETURN VENT
- AP — WIRELESS ACCESS POINT
- F — FIRE ALARM, HORN STROBE
- SPRINKLER HEAD
- OS — LIGHT SENSOR, OCC.
- S — SMOKE SENSOR
- H — HEAT SENSOR
- EXIST LIGHT FIXTURE
- LIGHT FIXTURE
- LIGHT FIXTURE
- LIGHT FIXTURE - SMALL CAN or PENDANT
- LARGE PENDANT FIXTURE
- EXIT — EXIT SIGN, ILLUMINATED FIXTURE

KEY

- EXISTING TO REMAIN
- PLASTER CEILING DEMO

Portland State UNIVERSITY
PSU CAPITAL PROJECTS & CONSTRUCTION

RMNC
RICHARD & MAURINE NEUBERGER CENTER

4TH FLOOR SPHR
INTERIOR REMODEL

PSU CAMPUS | BLOCK: 087
1600 SW 4TH AVENUE
PORTLAND, OREGON 97201

REGISTERED ARCHITECT
ARI-11654
GERALD R GOTSCHALL
PORTLAND, OREGON
STATE OF OREGON
Exp. 12/31/2026

ISSUED FOR BID & PERMIT

9/4/2026
HALF SIZE WHEN PRINTED AT 11X17

Sheet Title :
CEILING PLAN NORTH DEMOLITION

Revisions : *
Date : 2025

Drawn : NR
Checked : GRG

Sheet # : **A111**

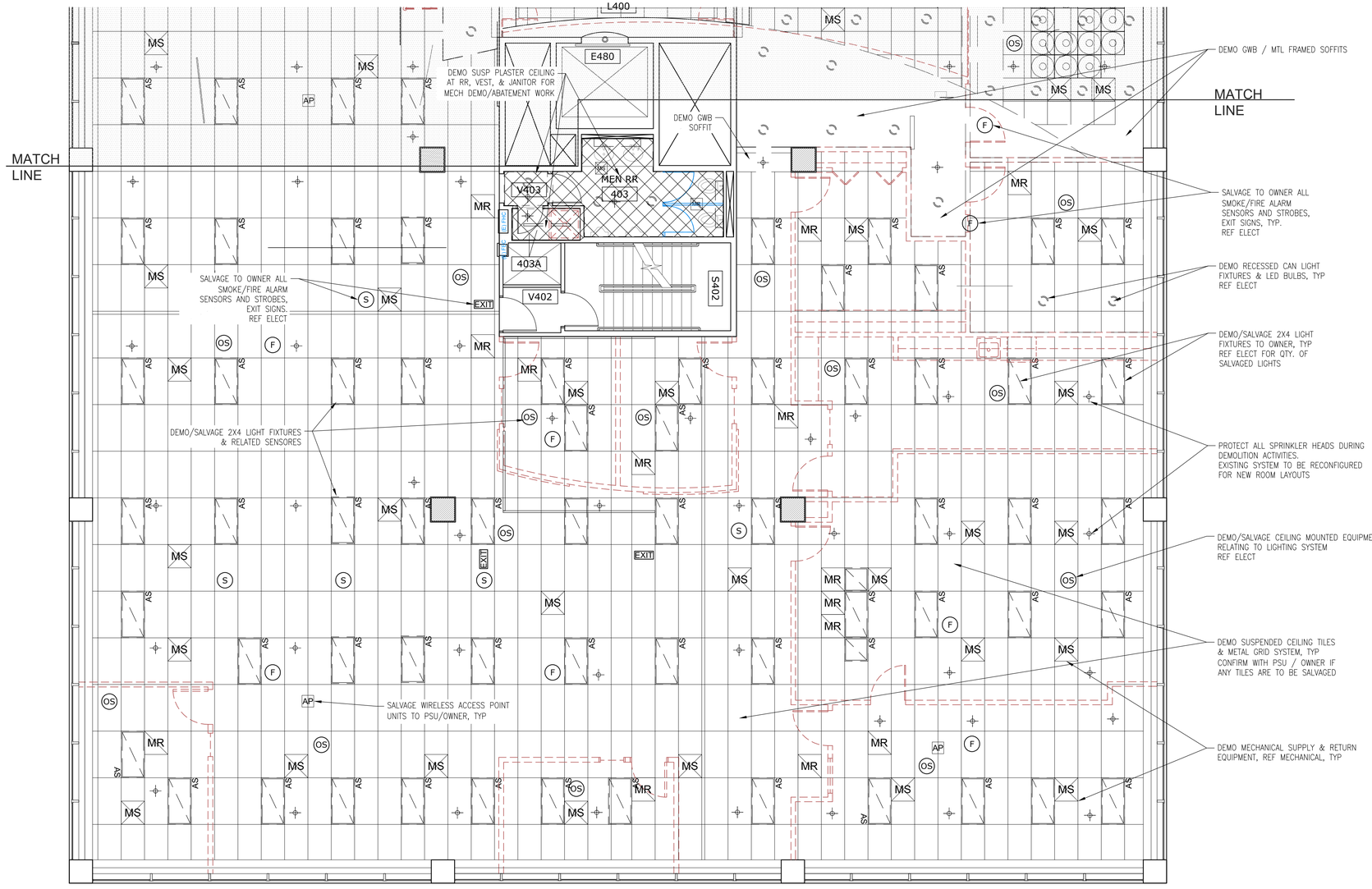

1 4TH FLOOR SOUTH FLOOR PLAN - CEILING - DEMO
3/16" = 1'-0"

DEMO NOTES

1. DEMO SUSPENDED ACOUSTICAL CEILING TILES & METAL GRID AND GWB SOFFITS TO REMOVE & ABATE DUCTWORK & INSULATION ABOVE CEILING.
2. COORDINATE REMOVAL, DEMO OR SALVAGE OF CEILING MOUNTED MECH, ELECTRICAL & OTHER ACCESSORIES PRIOR TO ABATEMENT.
   - 2.1. REFERENCE ELECTRICAL DRAWINGS FOR EXTENT OF LIGHT FIXTURES TO BE SALVAGED, IF ANY.
   - 2.2. DEMO MECHANICAL CEILING GRILLES IN SUSPENDED GRID, REF MECH DRAWINGS FOR ANY MECH GRILLES TO BE SALVAGED, IF ANY.
   - 2.3. DEMO / SALVAGE CEILING MOUNTED THERMOSTATS, COORD WITH MECH DRAWINGS
   - 2.4. DEMO / SALVAGE ALL CEILING MOUNTED WIRELESS (AP) ACCESS POINT UNITS (FOR WIFI), SALVAGE TO OWNER
   - 2.5. DEMO / SALVAGE TO OWNER ALL OCCUPANCY SENSORS
   - 2.6. DEMO / SALVAGE TO OWNER CEILING MOUNTED EXIT SIGNS
3. SALVAGE TO OWNER ALL FIRE ALARM / DETECTION SYSTEM ACCESSORIES. COORDINATE WITH PSU FACILITIES STAFF TO KEEP SYSTEM IN OPERATION DURING DEMO & CONSTRUCTION WORK.
4. COORDINATE & PROTECT EXISTING SPRINKLER SYSTEM DURING DEMO & ABATEMENT. COORDINATE WITH PSU FACILITIES STAFF & PSU PM IN ADVANCE FOR ANY IMPAIRMENTS OR DISRUPTION TO FIRE LIFE SAFETY SYSTEMS.
5. REFERENCE MECHANICAL FOR EXTENT OF DUCTWORK TO BE REMOVED AT CEILING. ABATEMENT WILL BE REQUIRED AT DUCTWORK, SEE ABATEMENT REPORTS FOR TYPE OF MASTIC, TAPE & INSULATION TO BE ABATED.
6. REFERENCE PLUMBING FOR EXTENT OF PIPING ABOVE CEILING TO BE REMOVED AT 4TH FLOOR & 3RD FLOOR CEILING, BELOW. ABATEMENT WILL BE REQUIRED AT SELECT AREAS FOR PLUMBING, SEE ABATEMENT REPORTS FOR TYPE OF INSULATION, MASTIC, OTHER MATERIALS ANTICIPATED AROUND EXISTING PIPING.
7. SEE A213 FOR PIPING & CEILING DEMO WORK ON 3RD FLOOR.
8. COORDINATE REMOVAL OF METAL FRAMED WALLS TO UNDERSIDE OF CEILING & BRACING ABOVE CEILING WHERE INDICATED FOR ABATEMENT WORK, TYP.
9. DEMO WALLS & BRACING FULL HEIGHT TO CONCRETE SLAB ABOVE.
10. DEMO PLASTER CEILINGS AT MENS RESTROOM, JANITOR ROOM, VESTIBULE FOR MECHANICAL DEMO & NEW WORK. PLASTER WALLS, WALL TILE & FLOOR TILE TO REMAIN. PROTECT TOILET FIXTURES & ACCESSORIES. SALVAGE CEILING-MOUNTED TOILET PARTITIONS & RELATED SUPPORT STRUCTURE ABOVE CEILING FOR REINSTALL.

SYMBOLS

- MS — MECHANICAL SUPPLY VENT
- MR — MECHANICAL RETURN VENT
- AP — WIRELESS ACCESS POINT
- F — FIRE ALARM, HORN STROBE
- SPRINKLER HEAD
- OS — LIGHT SENSOR, OCC.
- S — SMOKE SENSOR
- H — HEAT SENSOR
- AS — EXIST LIGHT FIXTURE
- BN — LIGHT FIXTURE
- LIGHT FIXTURE
- LIGHT FIXTURE - SMALL CAN or PENDANT
- LARGE PENDANT FIXTURE
- EXIT — EXIT SIGN, ILLUMINATED FIXTURE

KEY

- EXISTING TO REMAIN
- PLASTER CEILING DEMO

Portland State UNIVERSITY
PSU CAPITAL PROJECTS & CONSTRUCTION

RMNC
RICHARD & MAURINE NEUBERGER CENTER

4TH FLOOR SPHR
INTERIOR REMODEL

PSU CAMPUS | BLOCK: 087
1600 SW 4TH AVENUE
PORTLAND, OREGON 97201

REGISTERED ARCHITECT
ARI-11654
GERALD R GOTSCHALL
PORTLAND, OREGON
STATE OF OREGON
Exp. 12/31/2026

ISSUED FOR BID & PERMIT

9/4/2026
HALF SIZE WHEN PRINTED AT 11X17

Sheet Title :
CEILING PLAN SOUTH DEMOLITION

Revisions : *
Date : 2025

Drawn : NR
Checked : GRG

Sheet # : **A112**

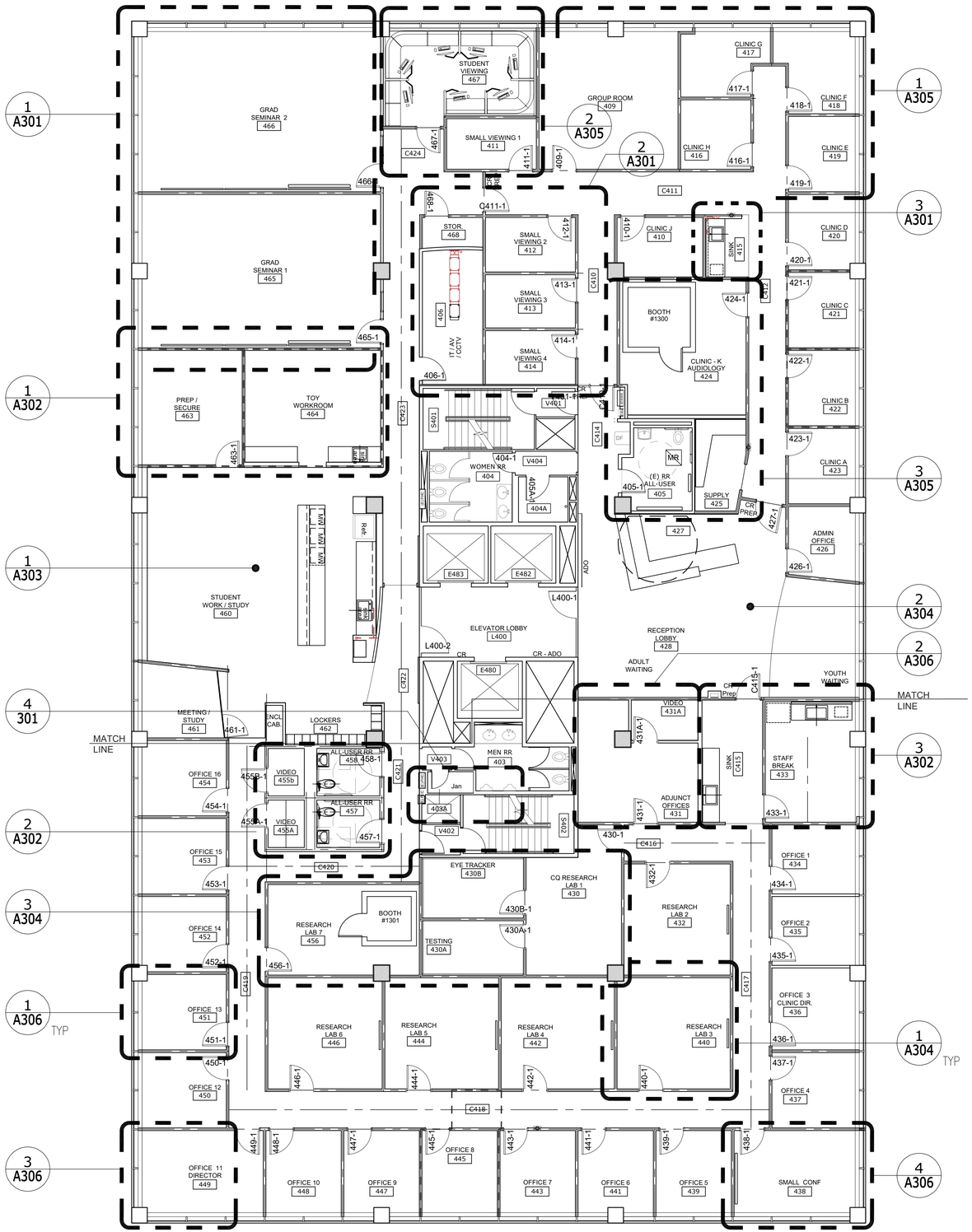

1 4TH FLOOR OVERALL FLOOR PLAN - NEW
1/8" = 1'-0"

SHEET NOTES

- COORDINATE WITH INTERIOR ARCHITECTURE SHEETS.
- SEE INTERIOR DRAWINGS FOR FLOOR AND WALL FINISHES. ROOM AND CASEWORK ELEVATIONS NOT SHOWN ON ARCHITECTURAL DRAWINGS.

Portland State UNIVERSITY
PSU CAPITAL PROJECTS & CONSTRUCTION

RMNC
RICHARD & MAURINE NEUBERGER CENTER

4TH FLOOR SPHR
INTERIOR REMODEL

PSU CAMPUS | BLOCK: 087
1600 SW 4TH AVENUE
PORTLAND, OREGON 97201

REGISTERED ARCHITECT
ARI-11654
GERALD R GOTSCHALL
PORTLAND, OREGON
STATE OF OREGON
Exp. 12/31/2026

ISSUED FOR BID & PERMIT

9/4/2026
HALF SIZE WHEN PRINTED AT 11X17

Sheet Title :
OVERALL FLOOR PLAN

Revisions :	Date :
*	2026

Drawn : NR
Checked : GRG

Sheet # :
A200

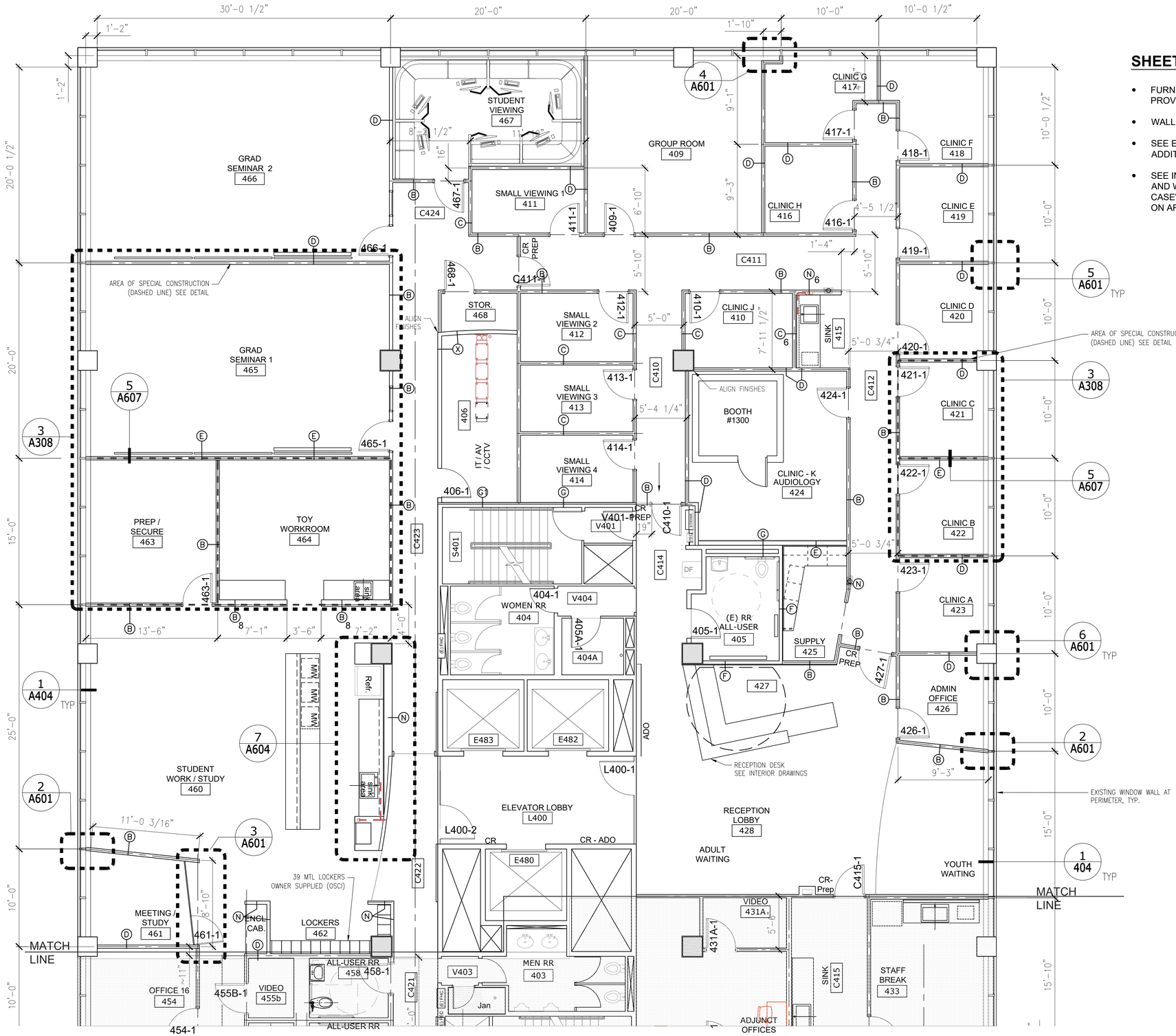

1 4TH FLOOR - NORTH END PLAN
3/16" = 1'-0"

SHEET NOTES

- FURNISHING, FURNITURE TO BE PROVIDED BY OWNER.
- WALL TYPES SEE A402
- SEE ENLARGED PLANS FOR ADDITIONAL DETAILS
- SEE INTERIOR DRAWINGS FOR FLOOR AND WALL FINISHES. ROOM AND CASEWORK ELEVATIONS NOT SHOWN ON ARCHITECTURAL DRAWINGS.

Portland State UNIVERSITY
PSU CAPITAL PROJECTS & CONSTRUCTION

RMNC
RICHARD & MAURINE NEUBERGER CENTER

4TH FLOOR SPHR
INTERIOR REMODEL

PSU CAMPUS | BLOCK: 087
1600 SW 4TH AVENUE
PORTLAND, OREGON 97201

REGISTERED ARCHITECT
ARI-11654
GERALD R GOTSCHALL
PORTLAND, OREGON
STATE OF OREGON
Exp. 12/31/2026

ISSUED FOR BID & PERMIT

9/4/2026
HALF SIZE WHEN PRINTED AT 11X17

Sheet Title :
FLOOR PLAN NORTH

Revisions :	Date :
*	2026

Drawn : NR Checked : GRG

Sheet # : **A201**

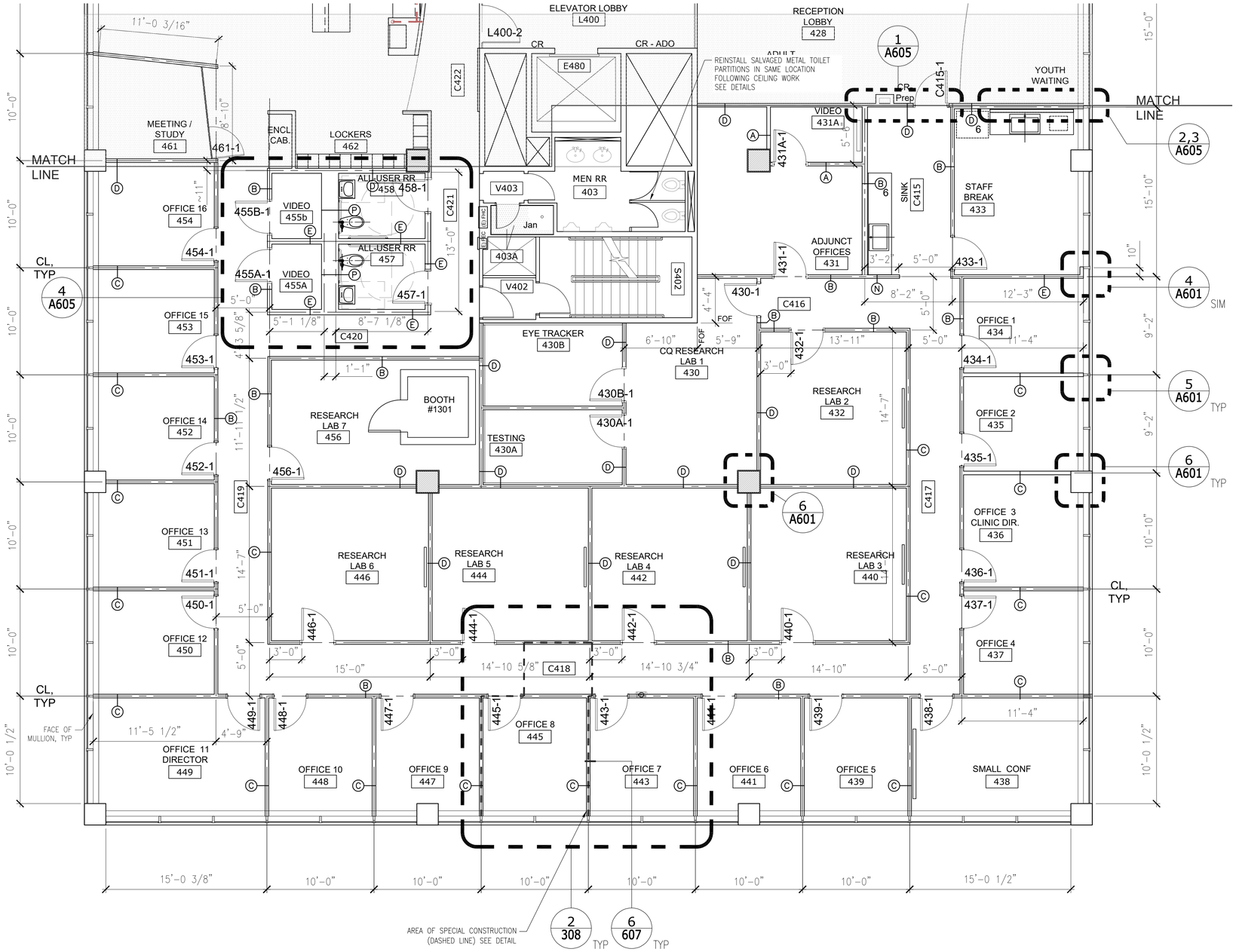

1 4TH FLOOR - SOUTH AREA PLAN
3/16" = 1'-0"

SHEET NOTES

- FURNISHING, FURNITURE TO BE PROVIDED BY OWNER.
- WALL TYPES SEE A402
- SEE ENLARGED PLANS FOR ADDITIONAL DETAILS
- SEE INTERIOR DRAWINGS FOR FLOOR AND WALL FINISHES. ROOM AND CASEWORK ELEVATIONS NOT SHOWN ON ARCHITECTURAL DRAWINGS.

Portland State UNIVERSITY
PSU CAPITAL PROJECTS & CONSTRUCTION

RMNC
RICHARD & MAURINE NEUBERGER CENTER

4TH FLOOR SPHR
INTERIOR REMODEL

PSU CAMPUS | BLOCK: 087
1600 SW 4TH AVENUE
PORTLAND, OREGON 97201

REGISTERED ARCHITECT
ARI-11654
GERALD R GOTSCHALL
PORTLAND, OREGON
STATE OF OREGON
Exp. 12/31/2026

ISSUED FOR BID & PERMIT

9/4/2026
HALF SIZE WHEN PRINTED AT 11X17

Sheet Title :
FLOOR PLAN SOUTH

Revisions :	Date :
*	2026

Drawn : NR Checked : GRG

Sheet # : **A202**

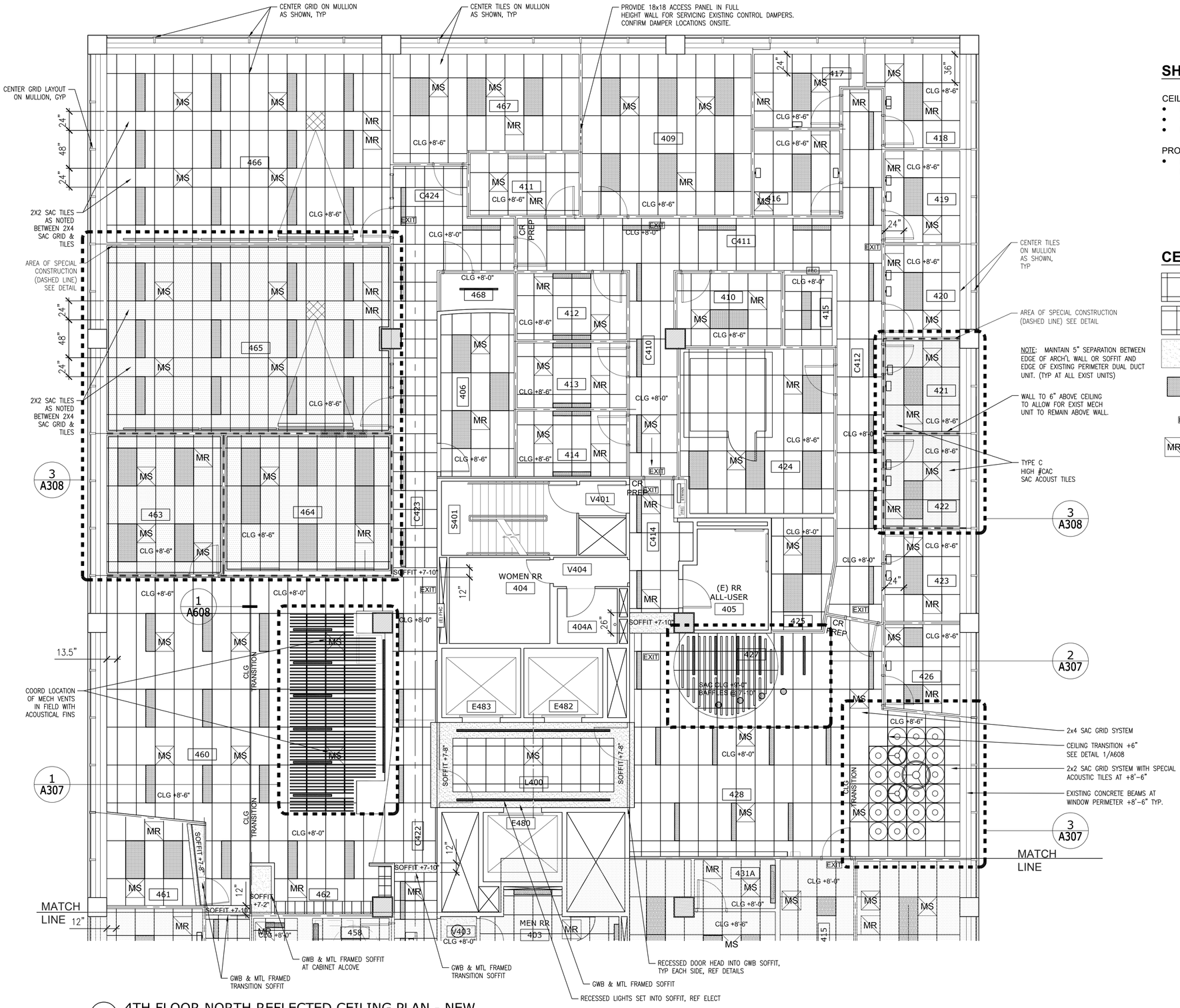

1 4TH FLOOR NORTH REFLECTED CEILING PLAN - NEW
3/16" = 1'-0"

SHEET NOTES

CEILING NOTES:
- LIGHTING, REF ELECT
- SPRINKLERS, REF MECH
- MECH VENT GRILLES, REF MECH

PROTECT:
- PROTECT EXISTING RESTROOMS, FIXTURES, PARTITIONS, FLOOR & WALL TILES, INCLUDING AT VESTIBULES (V403, V404)

CEILING KEY

- 2x4 CEILING GRID
- 2x2 CEILING GRID
- GWB CEILING
- LIGHTING FIXTURE, SEE ELEC.
- EXIT — EXIT SIGN, SEE ELEC.
- MR MS — MECHANICAL SUPPLY & RETURN GRILLES, REF MECH

Portland State UNIVERSITY
PSU CAPITAL PROJECTS & CONSTRUCTION

RMNC
RICHARD & MAURINE NEUBERGER CENTER

4TH FLOOR SPHR
INTERIOR REMODEL

PSU CAMPUS | BLOCK: 087
1600 SW 4TH AVENUE
PORTLAND, OREGON 97201

REGISTERED ARCHITECT
ARI-11654
GERALD R GOTSCHALL
PORTLAND, OREGON
STATE OF OREGON
Exp. 12/31/2026

ISSUED FOR BID & PERMIT

9/4/2026
HALF SIZE WHEN PRINTED AT 11X17

Sheet Title :
REFLECTED CEILING PLAN - NORTH

Revisions : *
Date : 2026

Drawn : NR
Checked : GRG

Sheet # :
A211

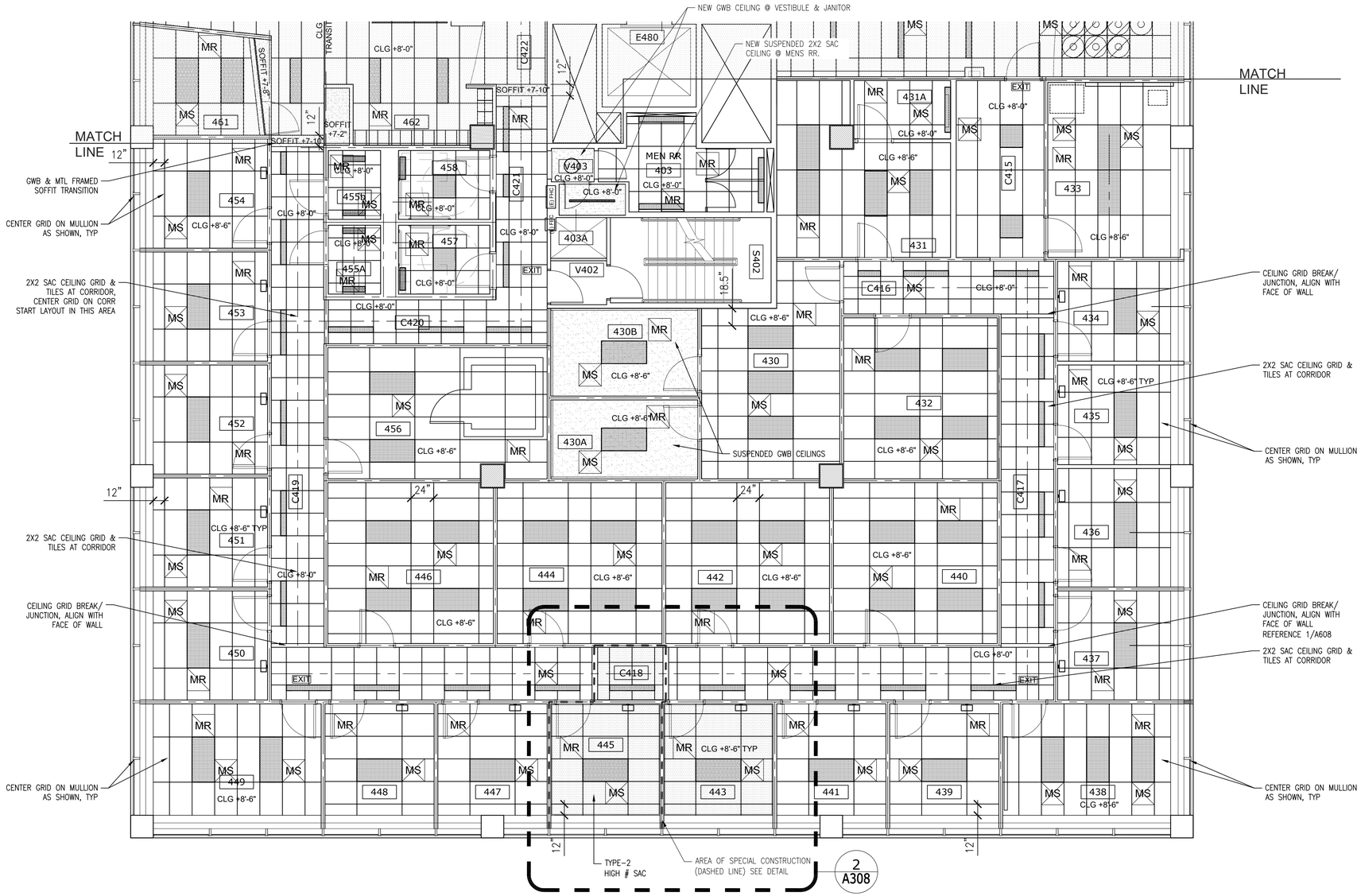

1 4TH FLOOR SOUTH REFLECTED CEILING PLAN - NEW
3/16" = 1'-0"

SHEET NOTES

CEILING NOTES:
- LIGHTING, REF ELECT
- SPRINKLERS, REF MECH
- MECH VENT GRILLES, REF MECH

CEILING KEY

- 2x4 CEILING GRID
- 2x2 CEILING GRID
- GWB CEILING
- LIGHTING FIXTURE, SEE ELEC.
- EXIT — EXIT SIGN, SEE ELEC.
- MR MS — MECHANICAL SUPPLY & RETURN GRILLES, REF MECH

Portland State UNIVERSITY
PSU CAPITAL PROJECTS & CONSTRUCTION

RMNC
RICHARD & MAURINE NEUBERGER CENTER

4TH FLOOR SPHR
INTERIOR REMODEL

PSU CAMPUS | BLOCK: 087
1600 SW 4TH AVENUE
PORTLAND, OREGON 97201

REGISTERED ARCHITECT
ARI-11654
GERALD R GOTSCHALL
PORTLAND, OREGON
STATE OF OREGON
Exp. 12/31/2026

ISSUED FOR BID & PERMIT

9/4/2026

HALF SIZE WHEN PRINTED AT 11X17

Sheet Title :
REFLECTED CEILING PLAN - SOUTH

Revisions :	Date :
*	2025

Drawn : NR Checked : GRG

Sheet # : **A212**

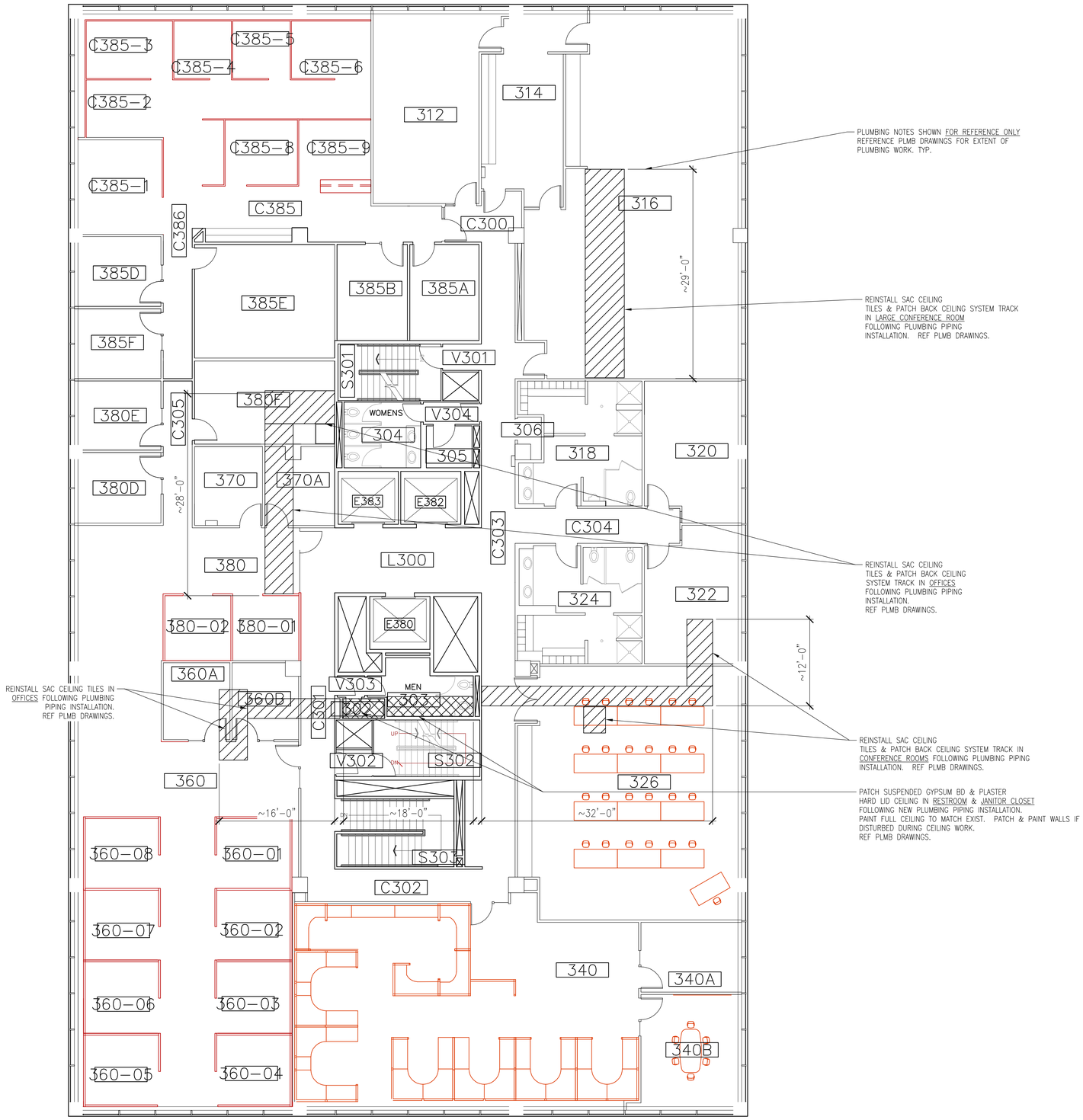

PLUMBING NOTES SHOWN FOR REFERENCE ONLY REFERENCE PLMB DRAWINGS FOR EXTENT OF PLUMBING WORK. TYP.

REINSTALL SAC CEILING TILES & PATCH BACK CEILING SYSTEM TRACK IN LARGE CONFERENCE ROOM FOLLOWING PLUMBING PIPING INSTALLATION. REF PLMB DRAWINGS.

REINSTALL SAC CEILING TILES & PATCH BACK CEILING SYSTEM TRACK IN OFFICES FOLLOWING PLUMBING PIPING INSTALLATION. REF PLMB DRAWINGS.

REINSTALL SAC CEILING TILES IN OFFICES FOLLOWING PLUMBING PIPING INSTALLATION. REF PLMB DRAWINGS.

REINSTALL SAC CEILING TILES & PATCH BACK CEILING SYSTEM TRACK IN CONFERENCE ROOMS FOLLOWING PLUMBING PIPING INSTALLATION. REF PLMB DRAWINGS.

PATCH SUSPENDED GYPSUM BD & PLASTER HARD LID CEILING IN RESTROOM & JANITOR CLOSET FOLLOWING NEW PLUMBING PIPING INSTALLATION. PAINT FULL CEILING TO MATCH EXIST. PATCH & PAINT WALLS IF DISTURBED DURING CEILING WORK. REF PLMB DRAWINGS.

1 3RD FLOOR OVERALL FLOOR PLAN - CEILING - NEW WORK
1/8" = 1'-0"

SHEET NOTES

SEE PLUMBING DRAWINGS FOR ALL PLUMBING / PIPING WORK IN CEILING OF LEVEL 3.

1. COORDINATE HOLE DRILLING IN LEVEL- 4 CONCRETE FLOOR / CEILING BETWEEN PLUMBING & ARCHITECTURAL TO PRESERVE EXISTING FINISHES ON LEVEL- 3.
2. PATCH BACK ANY REMOVED OR DAMAGED MATERIALS TO MATCH EXISTING.
3. REINSTALL EXISTING SALVAGED / REMOVED SAC CEILING TILES & GRID. REPLACE DAMAGED TILES & GRID AS NEEDED TO MATCH EXISTING AND RESTORE TO PREVIOUS CONDITION.

Portland State UNIVERSITY
PSU CAPITAL PROJECTS & CONSTRUCTION

RMNC
RICHARD & MAURINE NEUBERGER CENTER

4TH FLOOR SPHR
INTERIOR REMODEL

PSU CAMPUS | BLOCK: 087
1600 SW 4TH AVENUE
PORTLAND, OREGON 97201

REGISTERED ARCHITECT
ARI-11654
GERALD R GOTSCHALL
PORTLAND, OREGON
STATE OF OREGON
Exp. 12/31/2026

ISSUED FOR BID & PERMIT

9/4/2026

HALF SIZE WHEN PRINTED AT 11X17

Sheet Title :
LEVEL 3 - CEILING NEW WORK

Revisions :	Date :
*	2026

Drawn : NR
Checked : GRG

Sheet # :
A213

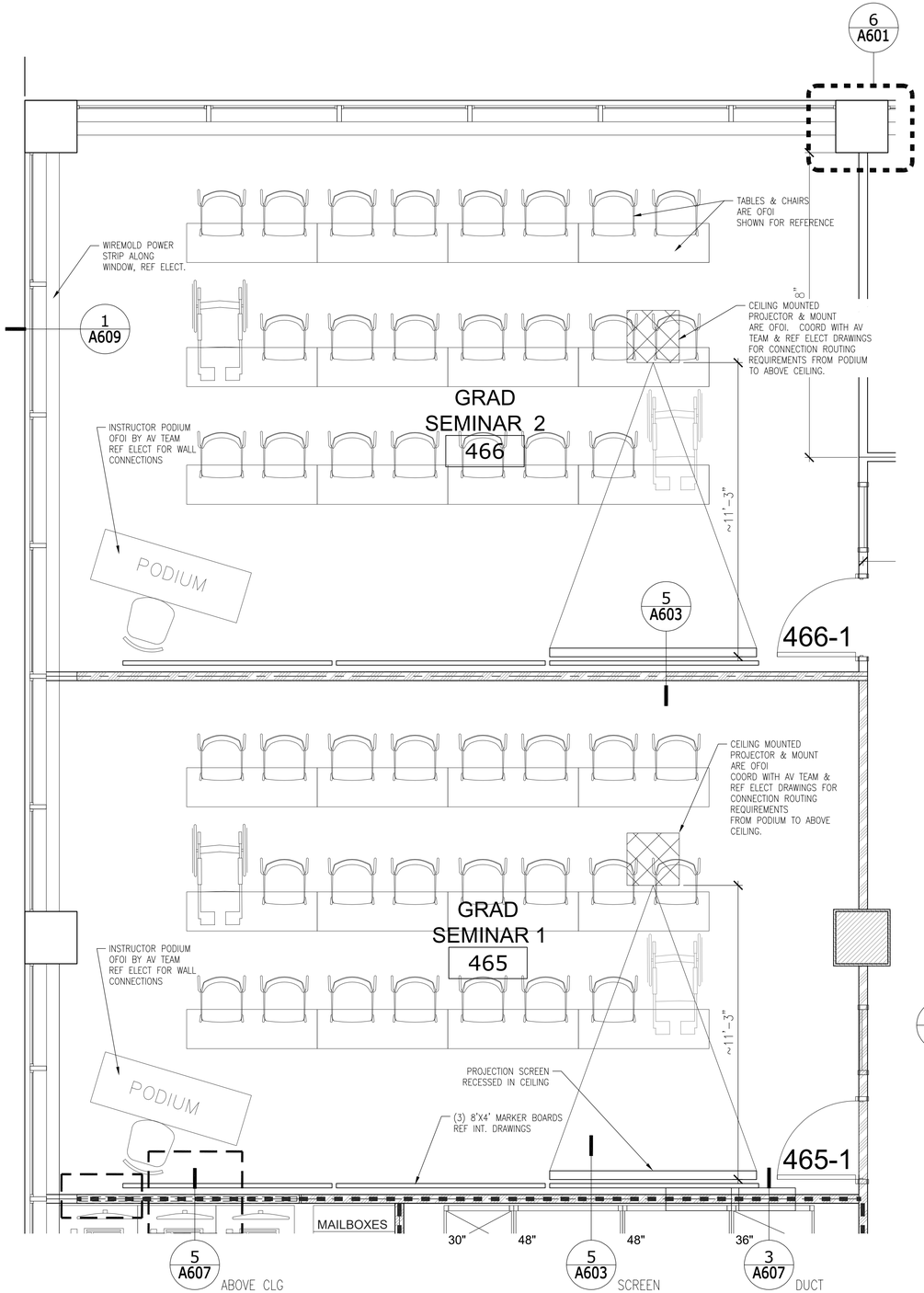

1 ENL. PLAN
3/8" = 1'-0"

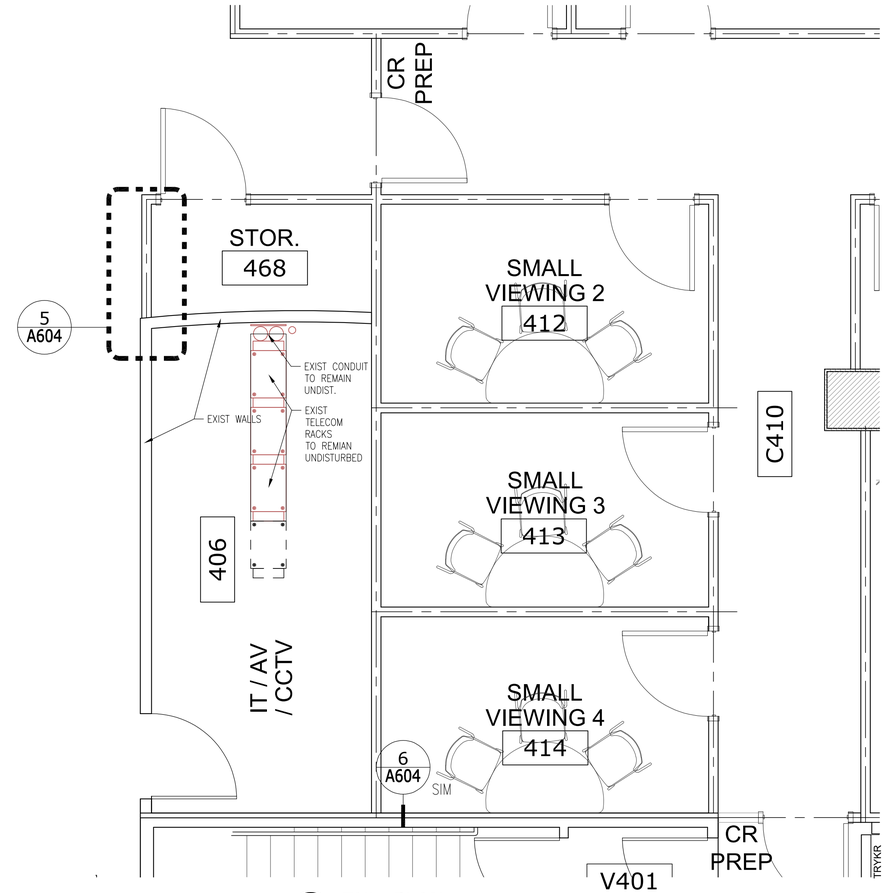

2 ENL. PLAN
3/8" = 1'-0"

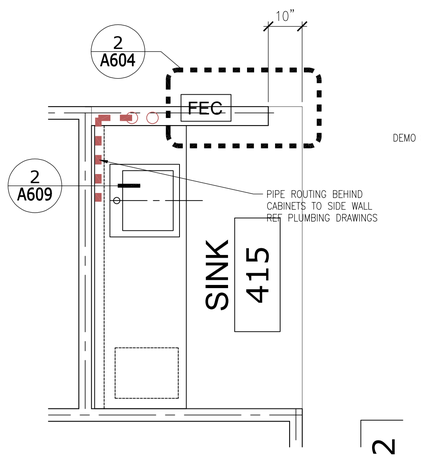

3 ENL. PLAN
1/2" = 1'-0"

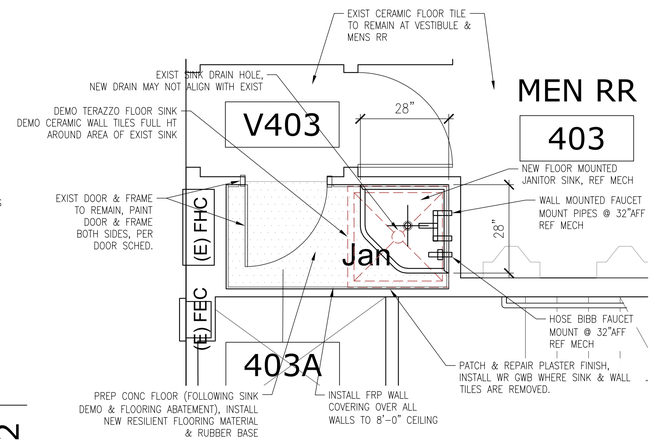

4 JANITOR CLOSET
1/2" = 1'-0"

Portland State UNIVERSITY

PSU CAPITAL PROJECTS & CONSTRUCTION

RMNC

RICHARD & MAURINE NEUBERGER CENTER

4TH FLOOR SPHR
INTERIOR REMODEL

PSU CAMPUS | BLOCK: 087
1600 SW 4TH AVENUE
PORTLAND, OREGON 97201

REGISTERED ARCHITECT
ARI-11654
GERALD R GOTSCHALL
PORTLAND, OREGON
STATE OF OREGON

Exp. 12/31/2026

ISSUED FOR BID & PERMIT

9/4/2026

HALF SIZE WHEN PRINTED AT 11X17

Sheet Title :

ENLARGED FLOOR PLANS

Revisions :	Date :
*	2026

Drawn : NR Checked : GRG

Sheet # :

A301

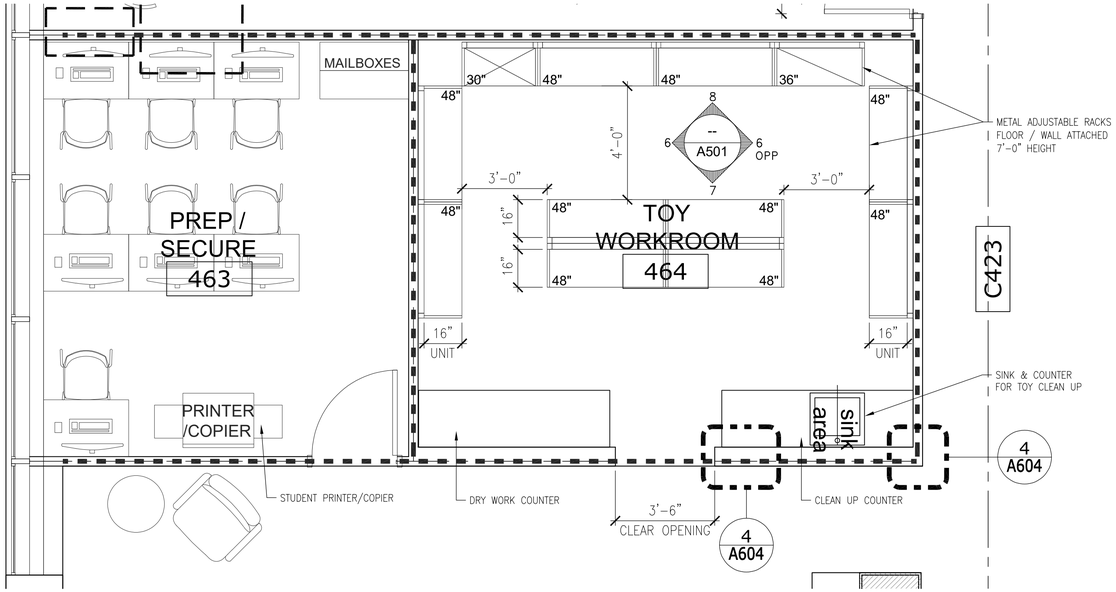

1 ENL. PLAN
3/8" = 1'-0"

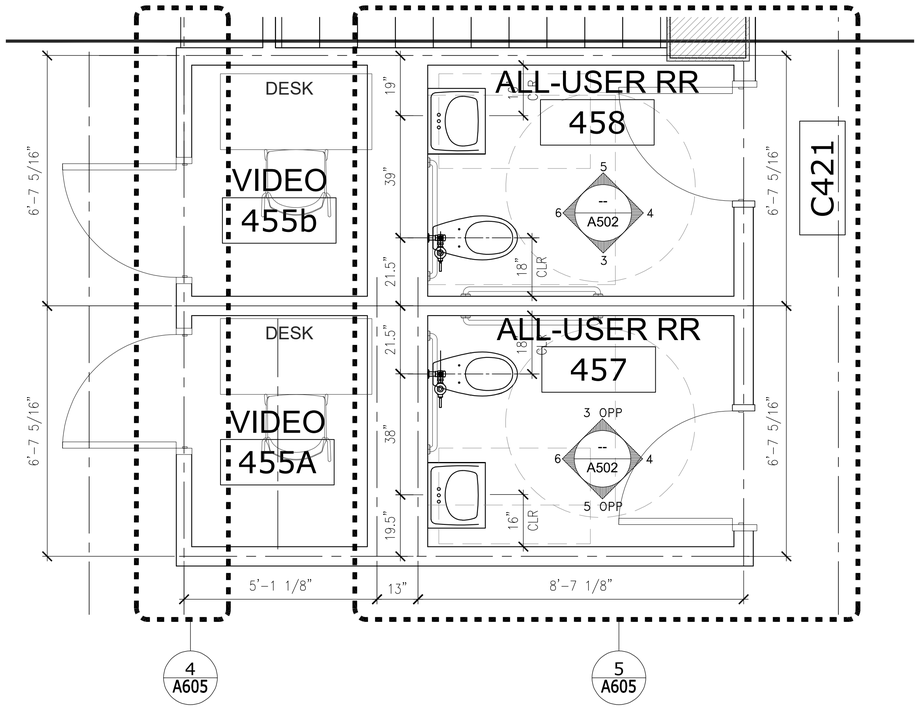

2 ENL. PLAN - RESTROOMS
1/2" = 1'-0"

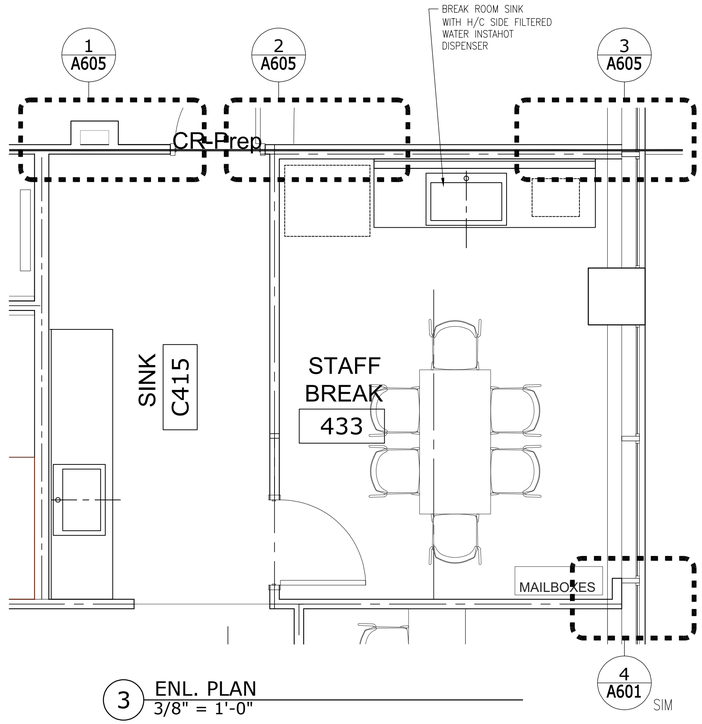

3 ENL. PLAN
3/8" = 1'-0"

Portland State UNIVERSITY

PSU CAPITAL PROJECTS & CONSTRUCTION

RMNC

RICHARD & MAURINE NEUBERGER CENTER

4TH FLOOR SPHR
INTERIOR REMODEL

PSU CAMPUS | BLOCK: 087
1600 SW 4TH AVENUE
PORTLAND, OREGON 97201

REGISTERED ARCHITECT
ARI-11654
GERALD R GOTSCHALL
PORTLAND, OREGON
STATE OF OREGON

Exp. 12/31/2026

ISSUED FOR BID & PERMIT

9/4/2026

HALF SIZE WHEN PRINTED AT 11X17

Sheet Title :

ENLARGED FLOOR PLANS

Revisions :	Date :
*	2026

Drawn : NR Checked : GRG

Sheet # : **A302**

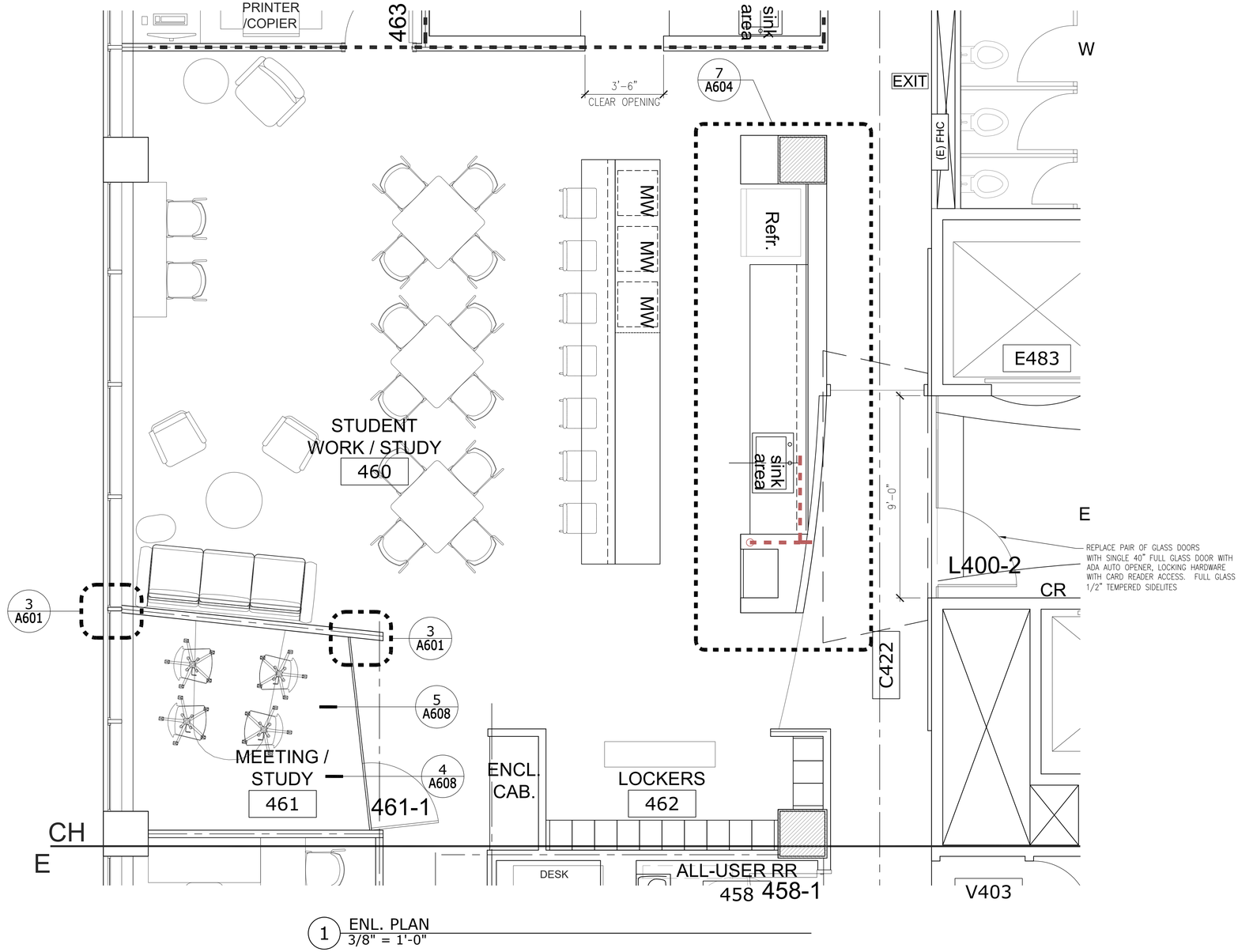

1 ENL. PLAN
3/8" = 1'-0"

Portland State UNIVERSITY

PSU CAPITAL PROJECTS & CONSTRUCTION

RMNC

RICHARD & MAURINE NEUBERGER CENTER

4TH FLOOR SPHR
INTERIOR REMODEL

PSU CAMPUS | BLOCK: 087
1600 SW 4TH AVENUE
PORTLAND, OREGON 97201

REGISTERED ARCHITECT
ARI-11654
GERALD R GOTSCHALL
PORTLAND, OREGON
STATE OF OREGON

Exp. 12/31/2026

ISSUED FOR BID & PERMIT

9/4/2026

HALF SIZE WHEN PRINTED AT 11X17

Sheet Title :

ENLARGED FLOOR PLANS

Revisions :	Date :
*	2026

Drawn : NR Checked : GRG

Sheet # : **A303**

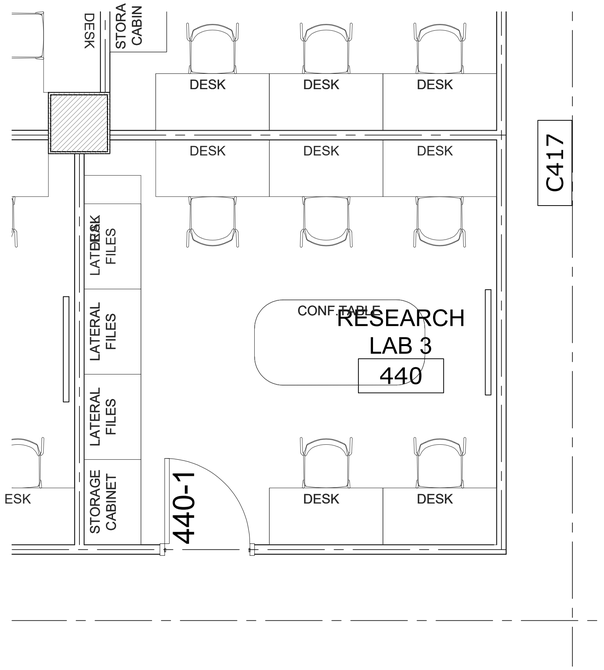

1 ENL. PLAN - TYPICAL LAB LAYOUT
3/8" = 1'-0"

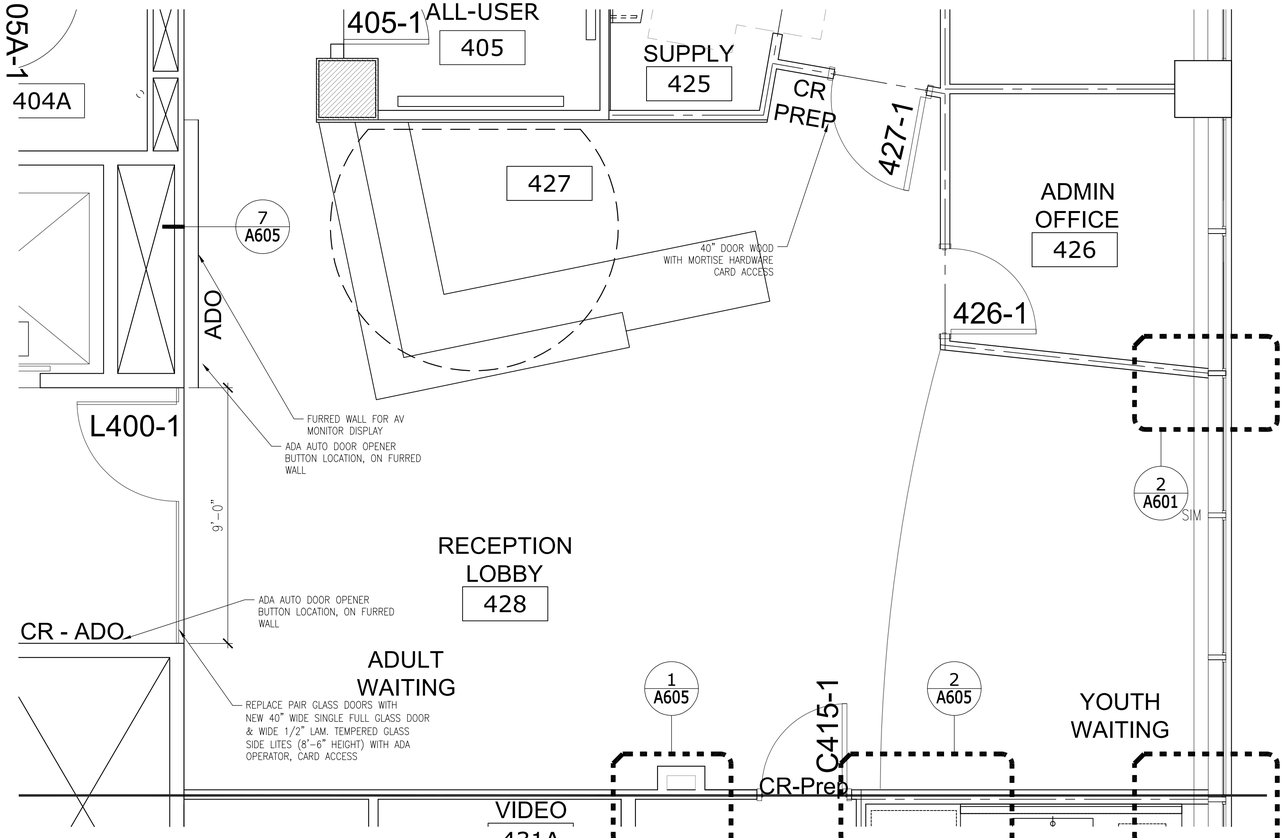

2 ENL. PLAN
3/8" = 1'-0"

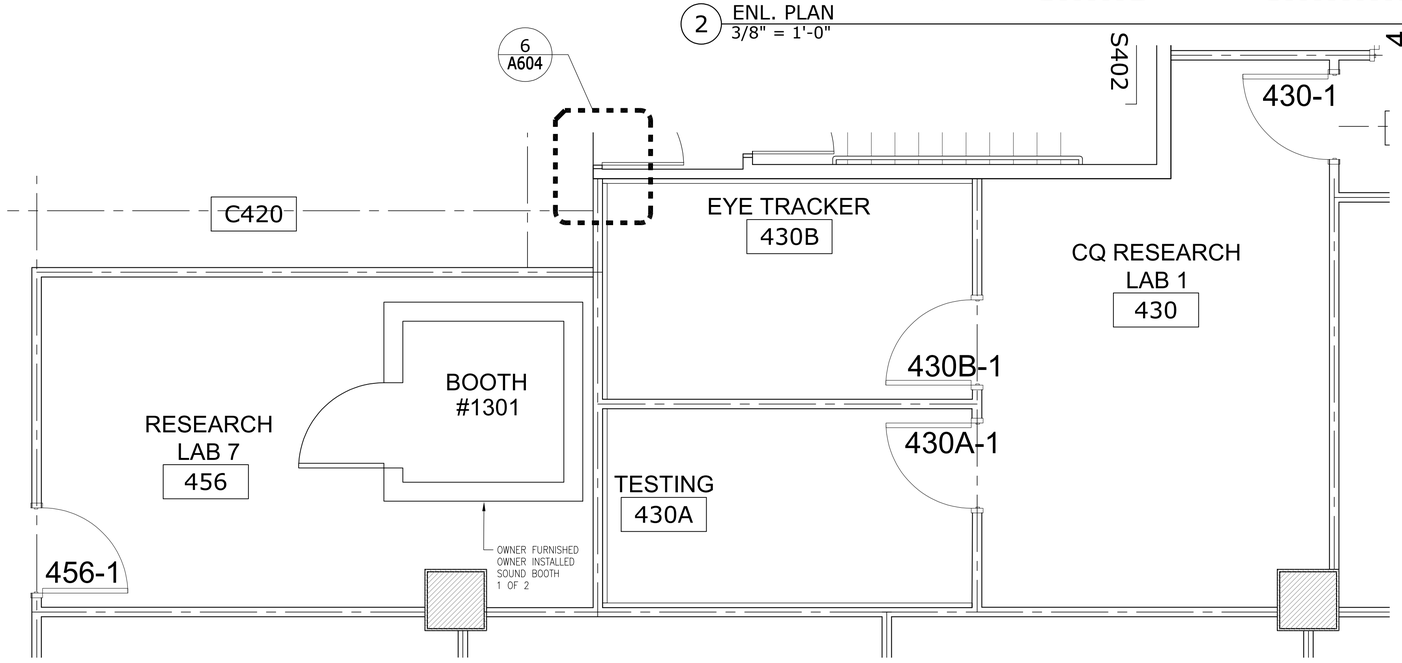

3 ENL. PLAN
3/8" = 1'-0"

Portland State UNIVERSITY
PSU CAPITAL PROJECTS & CONSTRUCTION

RMNC
RICHARD & MAURINE NEUBERGER CENTER

4TH FLOOR SPHR
INTERIOR REMODEL

PSU CAMPUS | BLOCK: 087
1600 SW 4TH AVENUE
PORTLAND, OREGON 97201

REGISTERED ARCHITECT
ARI-11654
GERALD R GOTSCHALL
PORTLAND, OREGON
STATE OF OREGON
Exp. 12/31/2026

ISSUED FOR BID & PERMIT

9/4/2026
HALF SIZE WHEN PRINTED AT 11X17

Sheet Title :
ENLARGED FLOOR PLANS

Revisions :	Date :
*	2026

Drawn : NR
Checked : GRG

Sheet # :
A304

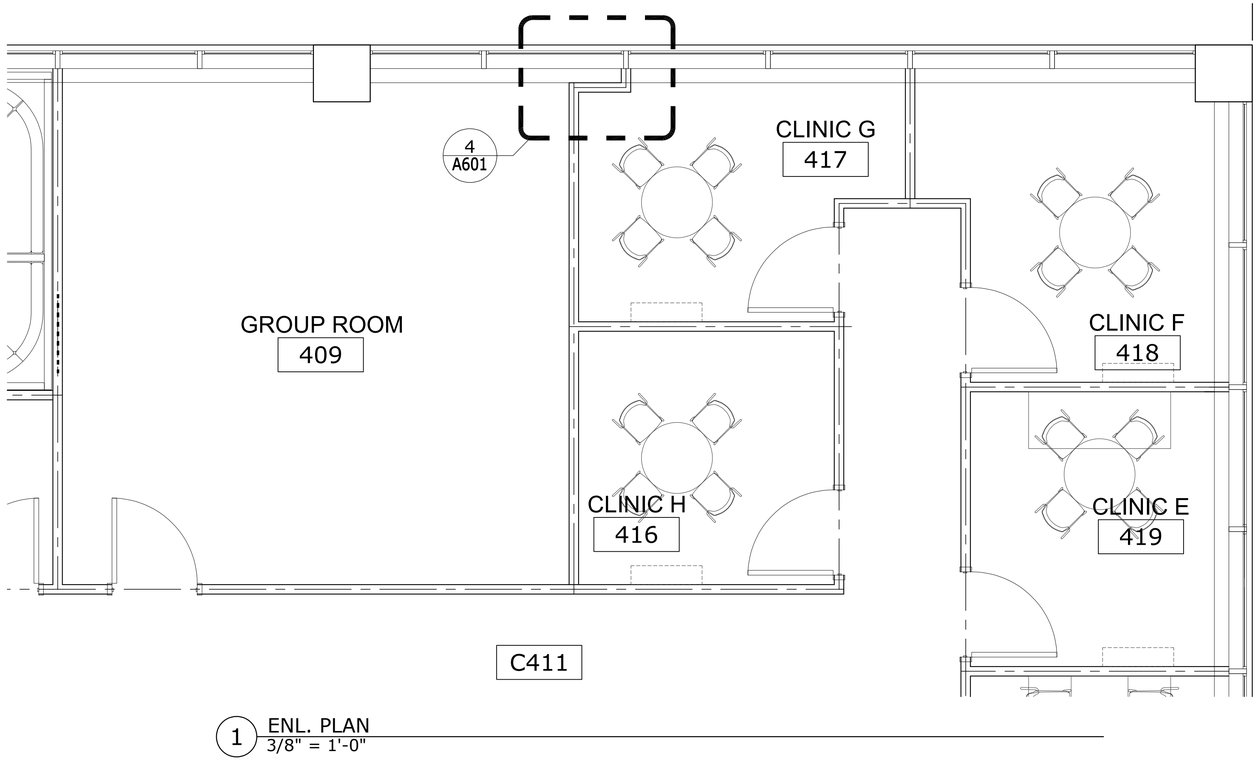

1 ENL. PLAN
3/8" = 1'-0"

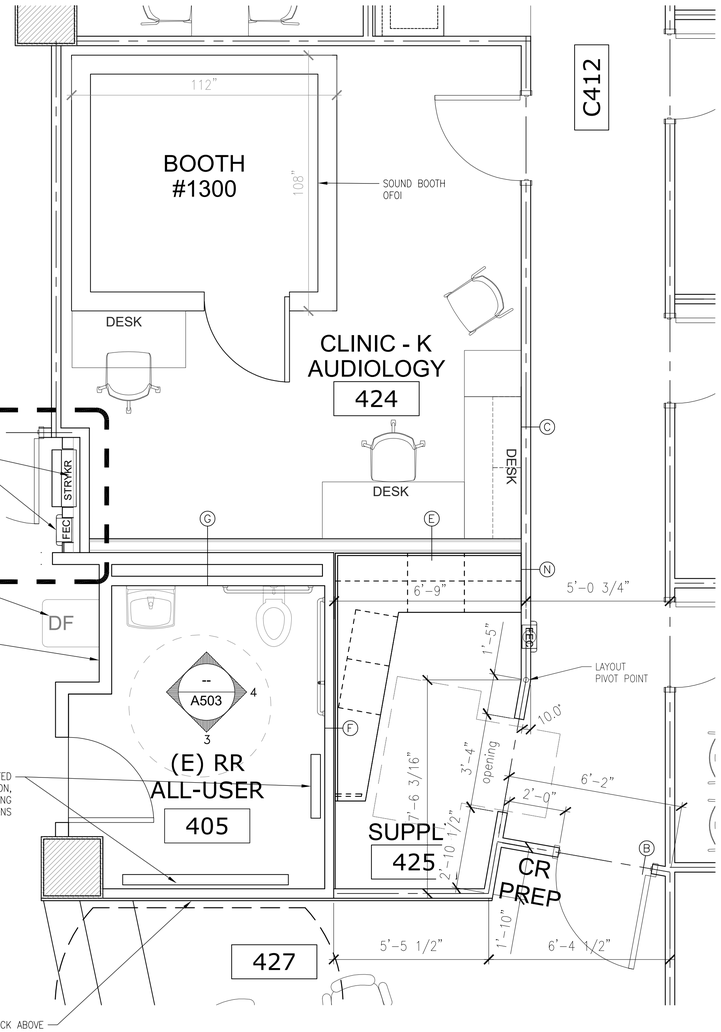

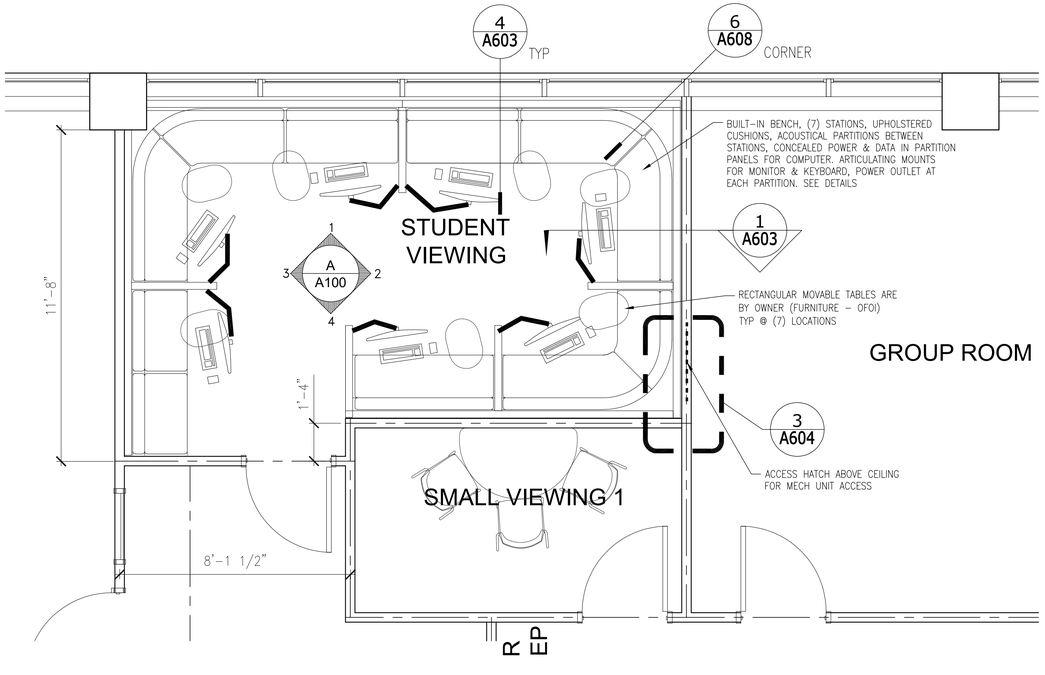

2 ENL. PLAN - STUDENT VIEWING ROOM
3/8" = 1'-0"

3 ENL. PLAN - RR 405 & CLINIC ENTRY
3/8" = 1'-0"

Portland State UNIVERSITY
PSU CAPITAL PROJECTS & CONSTRUCTION

RMNC
RICHARD & MAURINE NEUBERGER CENTER

4TH FLOOR SPHR
INTERIOR REMODEL

PSU CAMPUS | BLOCK: 087
1600 SW 4TH AVENUE
PORTLAND, OREGON 97201

REGISTERED ARCHITECT
ARI-11654
GERALD R GOTSCHALL
PORTLAND, OREGON
STATE OF OREGON
Exp. 12/31/2026

ISSUED FOR BID & PERMIT

9/4/2026
HALF SIZE WHEN PRINTED AT 11X17

Sheet Title :
ENLARGED FLOOR PLANS

Revisions :	Date :
*	2026

Drawn : NR
Checked : GRG

Sheet # : **A305**

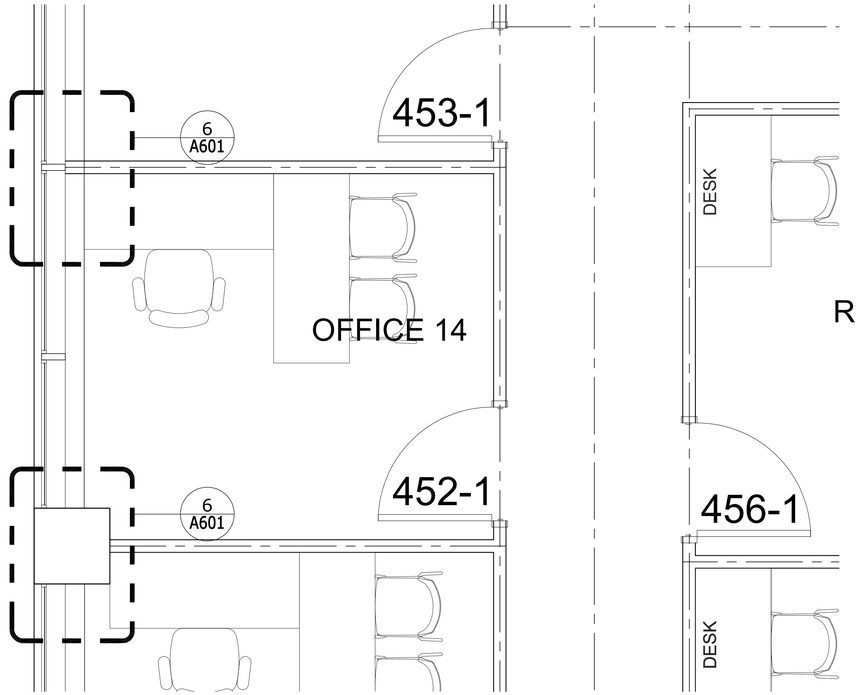

1 ENL. PLAN - Typical Office
3/8" = 1'-0"

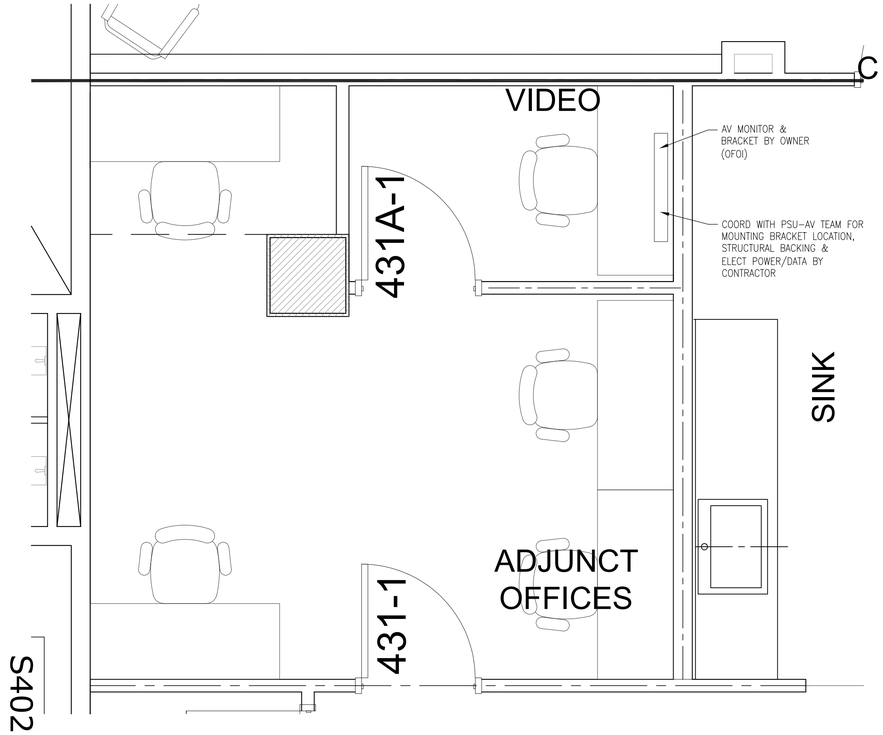

2 ENL. PLAN - ADJUNCT STAFF OFFICE
1/2" = 1'-0"

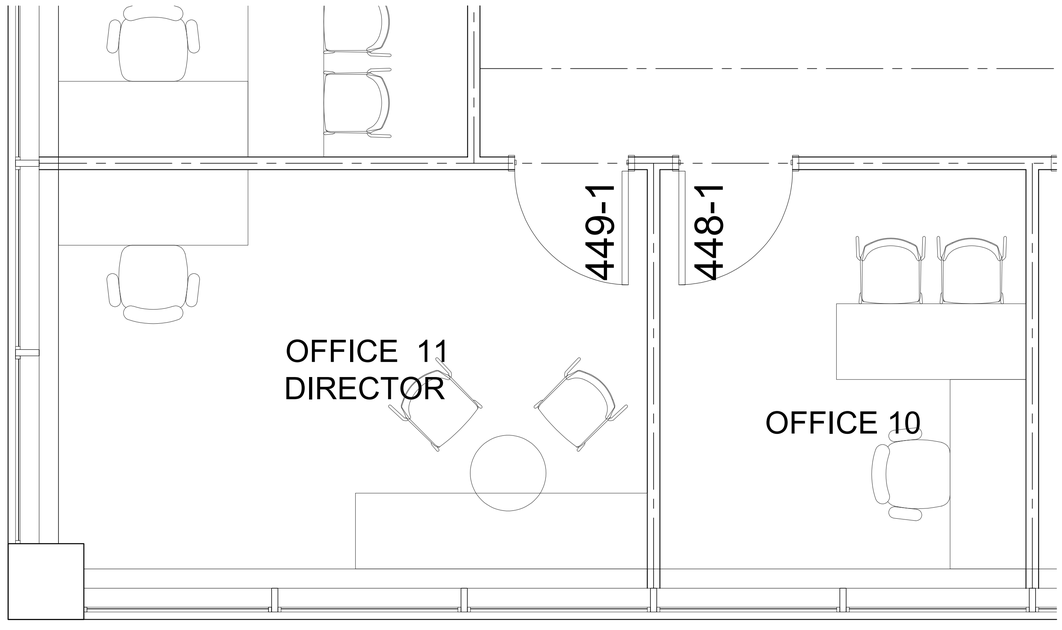

3 ENL. PLAN - Large Office & Typical Small Office
1/2" = 1'-0"

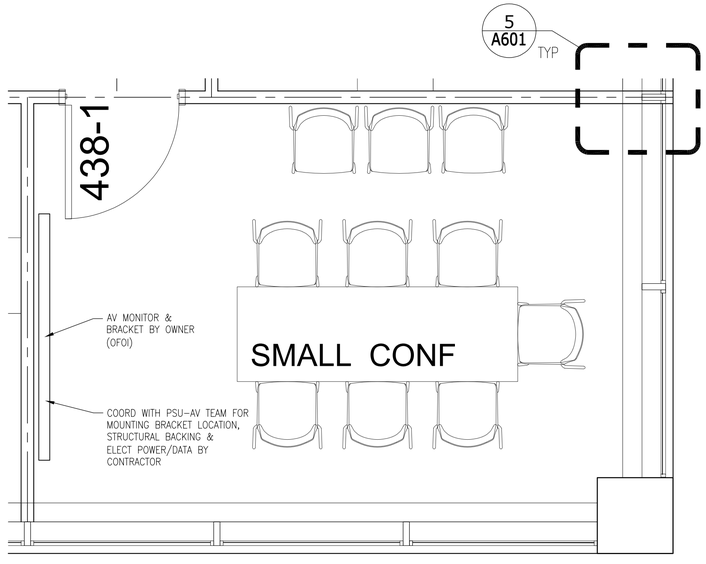

4 SMALL CONFERENCE ROOM
1/2" = 1'-0"

Portland State
UNIVERSITY

PSU CAPITAL PROJECTS & CONSTRUCTION

RMNC

RICHARD & MAURINE NEUBERGER CENTER

4TH FLOOR SPHR
INTERIOR REMODEL

PSU CAMPUS | BLOCK: 087
1600 SW 4TH AVENUE
PORTLAND, OREGON 97201

REGISTERED ARCHITECT
ARI-11654
GERALD R GOTSCHALL
PORTLAND, OREGON
STATE OF OREGON

Exp. 12/31/2026

ISSUED FOR BID & PERMIT

9/4/2026

HALF SIZE WHEN PRINTED AT 11X17

Sheet Title :

ENLARGED FLOOR PLANS

Revisions :	Date :
*	2026

Drawn : NR Checked : GRG

Sheet # : **A306**

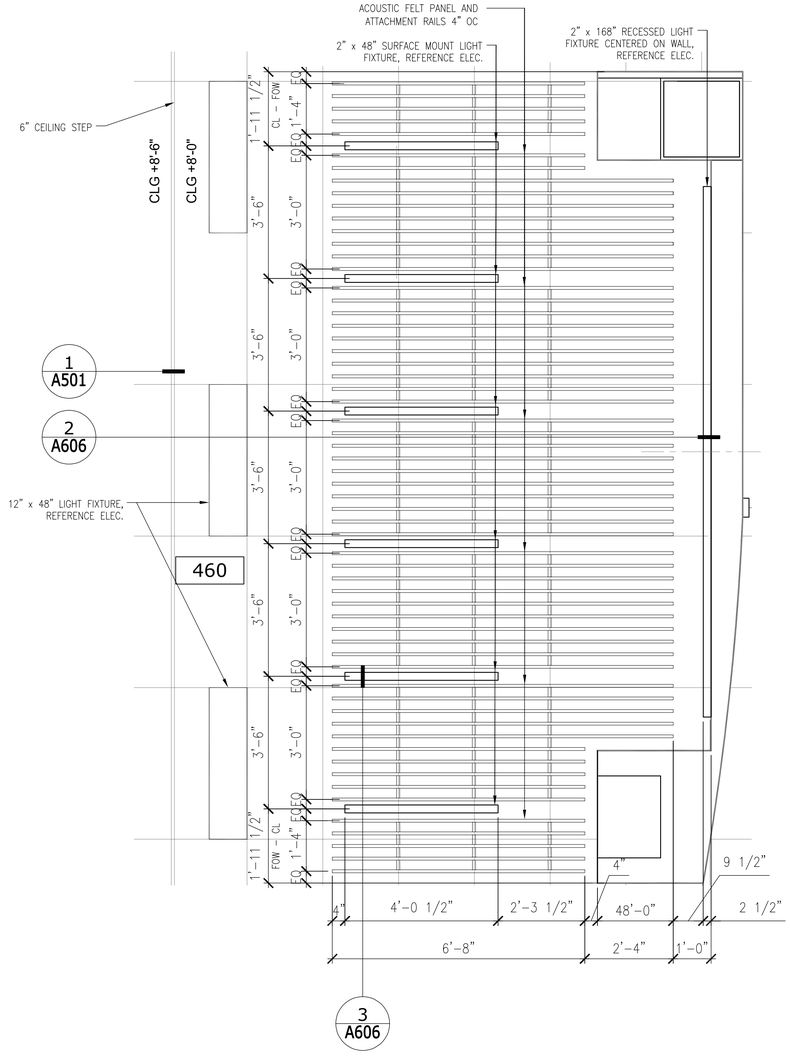

1 ENL. CEILING PLAN - STUDY 460
1/2" = 1'-0"

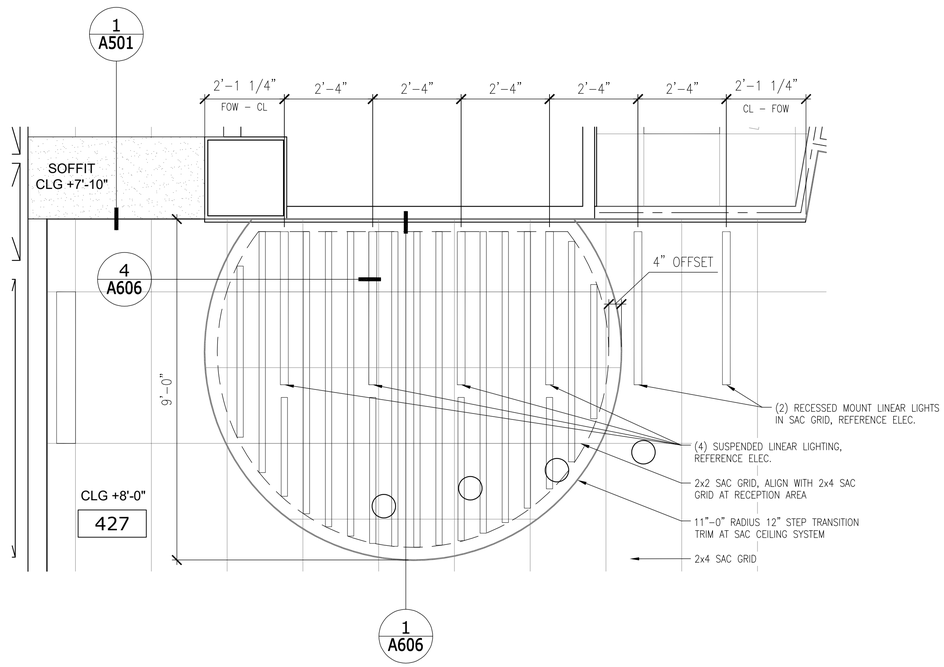

2 ENL. CEILING PLAN - RECEPTION 427
1/2" = 1'-0"

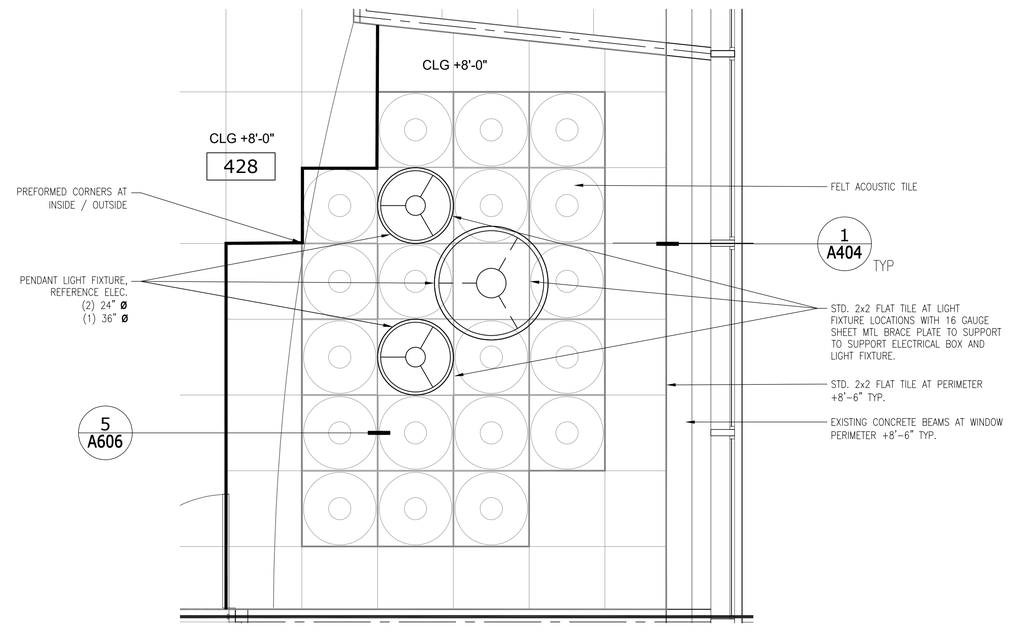

3 ENL. CEILING PLAN - YOUTH AREA 428
3/8" = 1'-0"

Portland State UNIVERSITY

PSU CAPITAL PROJECTS & CONSTRUCTION

RMNC

RICHARD & MAURINE NEUBERGER CENTER

4TH FLOOR SPHR
INTERIOR REMODEL

PSU CAMPUS | BLOCK: 087
1600 SW 4TH AVENUE
PORTLAND, OREGON 97201

REGISTERED ARCHITECT
ARI-11654
GERALD R GOTSCHALL
PORTLAND, OREGON
STATE OF OREGON

Exp. 12/31/2026

ISSUED FOR BID & PERMIT

9/4/2026

HALF SIZE WHEN PRINTED AT 11X17

Sheet Title :

ENLARGED CEILING PLANS

Revisions :	Date :
*	2026

Drawn : NR Checked : GRG

Sheet # : **A307**

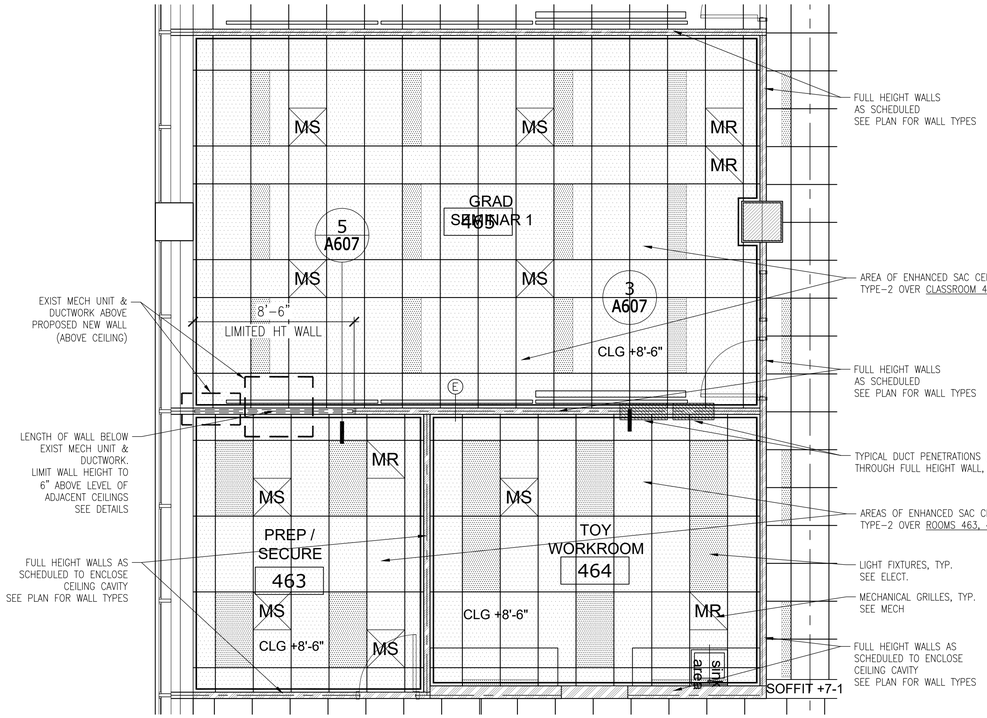

1 ENL. CEILING PLAN - 463, 464, 465
1/4" = 1'-0"

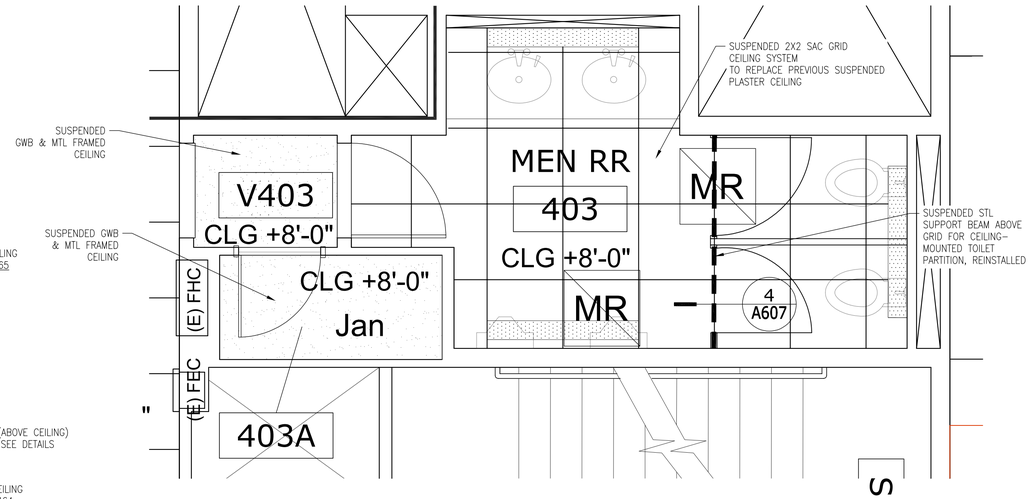

4 ENL. CEILING PLAN - MENS RR 403
1/2" = 1'-0"

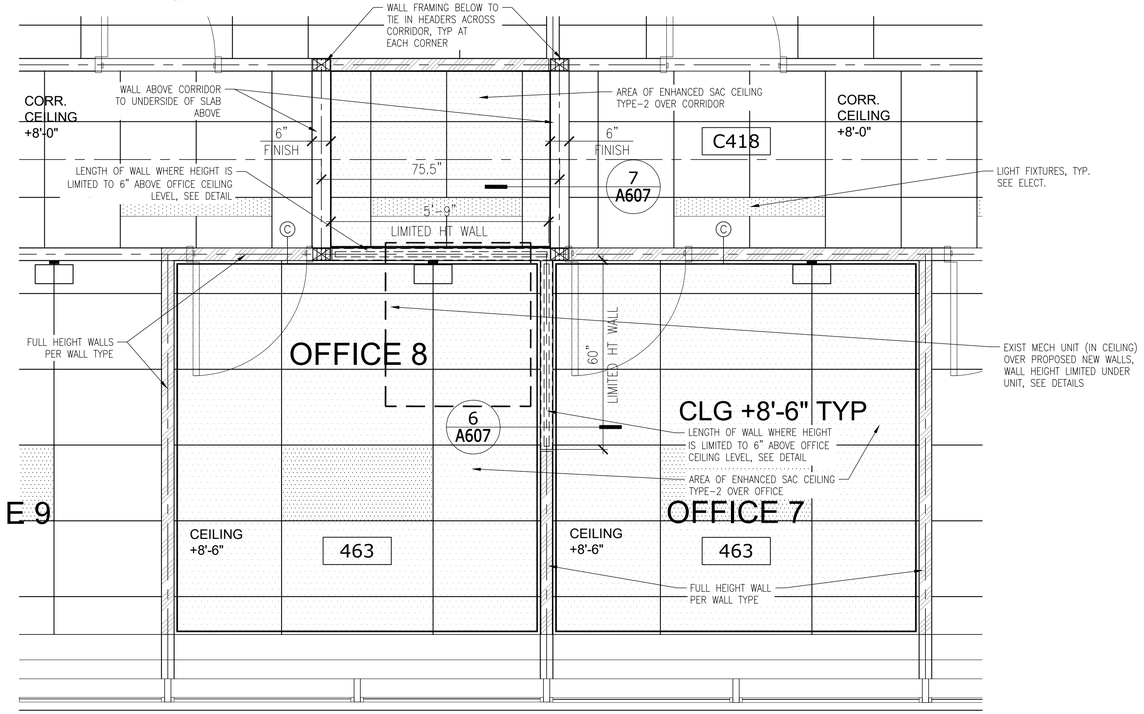

2 ENL. CEILING PLAN - OFFICES 443, 445
1/2" = 1'-0"

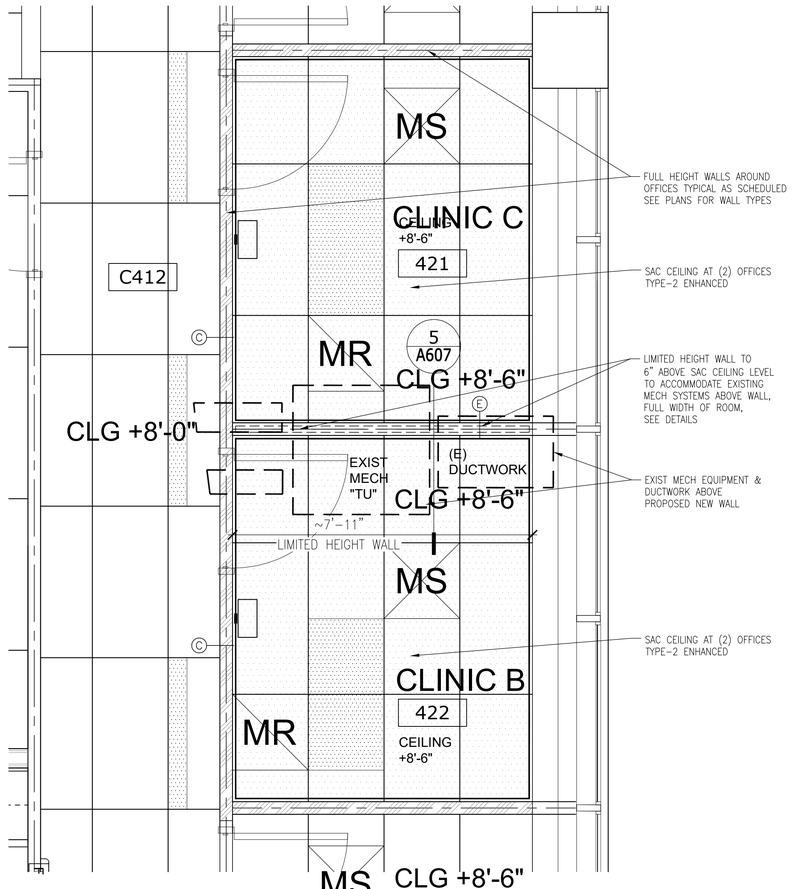

3 ENL. CEILING PLAN - OFFICES 421, 422
1/2" = 1'-0"

Portland State UNIVERSITY

PSU CAPITAL PROJECTS & CONSTRUCTION

RMNC

RICHARD & MAURINE NEUBERGER CENTER

4TH FLOOR SPHR
INTERIOR REMODEL

PSU CAMPUS | BLOCK: 087
1600 SW 4TH AVENUE
PORTLAND, OREGON 97201

REGISTERED ARCHITECT
ARI-11654
GERALD R GOTSCHALL
PORTLAND, OREGON
STATE OF OREGON

Exp. 12/31/2026

ISSUED FOR BID & PERMIT

9/4/2026

HALF SIZE WHEN PRINTED AT 11X17

Sheet Title :

ENLARGED CEILING PLANS

Revisions :	Date :
*	2026

Drawn : NR Checked : GRG

Sheet # : **A306**

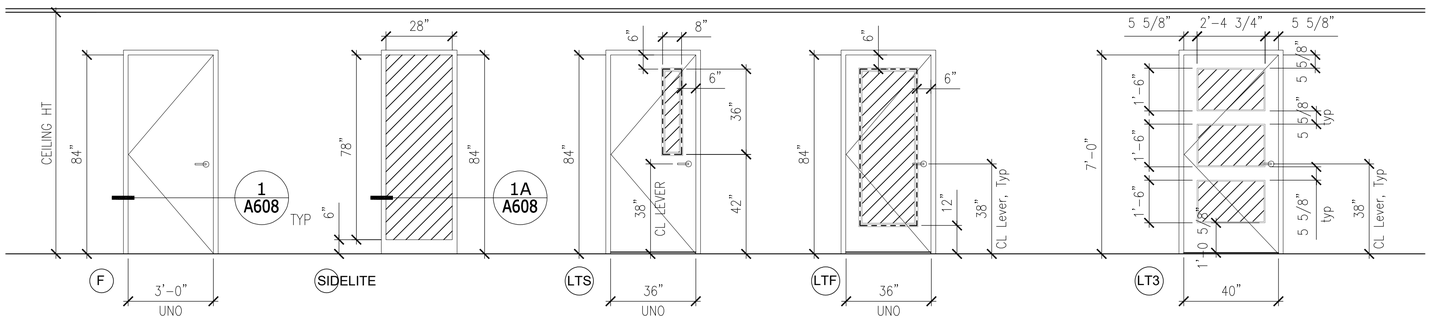

1 NEW DOORS + LITES
3/8" = 1'-0"

Typical Metal Frame Detail, See 1/A608

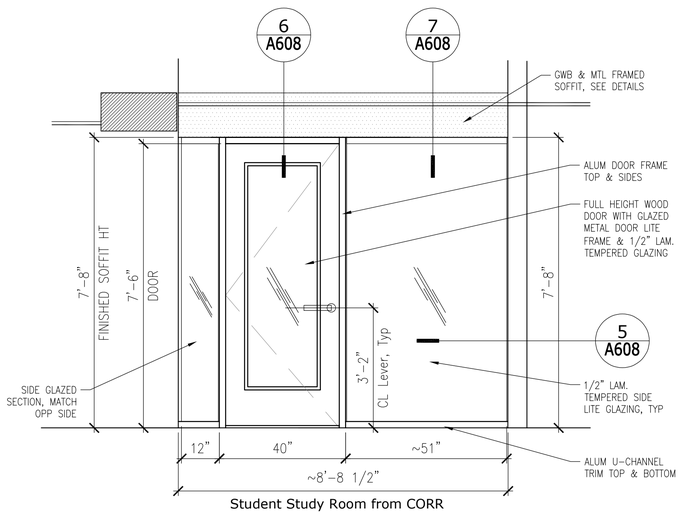

2 GLASS DOOR + LITE @ STUDY ROOM
1/2" = 1'-0"

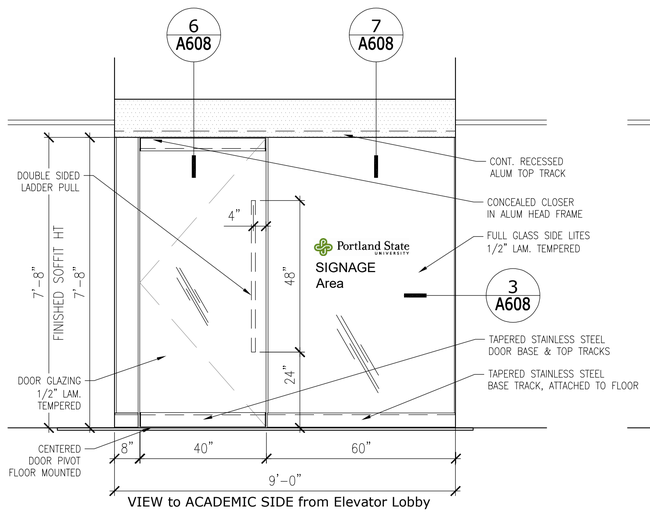

3 GLASS DOOR + LITE @ ACADEMIC
1/2" = 1'-0"

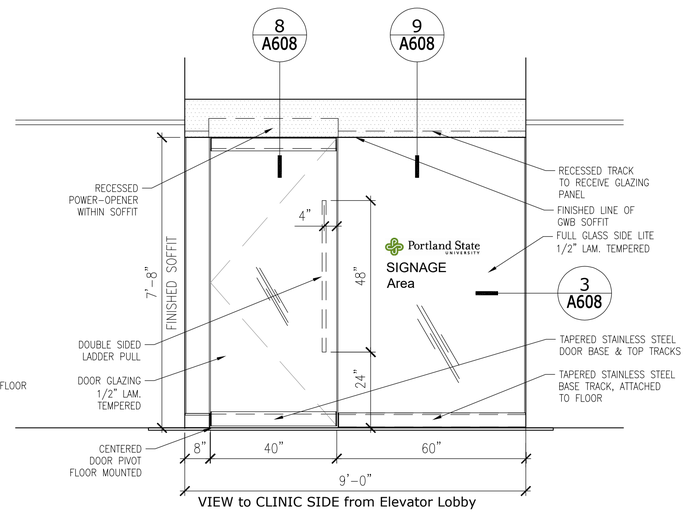

4 GLASS DOOR + LITE @ CLINIC
1/2" = 1'-0"

Portland State UNIVERSITY
PSU CAPITAL PROJECTS & CONSTRUCTION

RMNC
RICHARD & MAURINE NEUBERGER CENTER

4TH FLOOR SPHR
INTERIOR REMODEL

PSU CAMPUS | BLOCK: 087
1600 SW 4TH AVENUE
PORTLAND, OREGON 97201

REGISTERED ARCHITECT
ARI-11654
GERALD R GOTSCHALL
PORTLAND, OREGON
STATE OF OREGON
Exp. 12/31/2026

ISSUED FOR BID & PERMIT

9/4/2026

HALF SIZE WHEN PRINTED AT 11X17

Sheet Title :
DOOR & LITE ELEVATIONS DETAILS

Revisions : *
Date : 2026

Drawn : NR
Checked : GRG

Sheet # :
A401

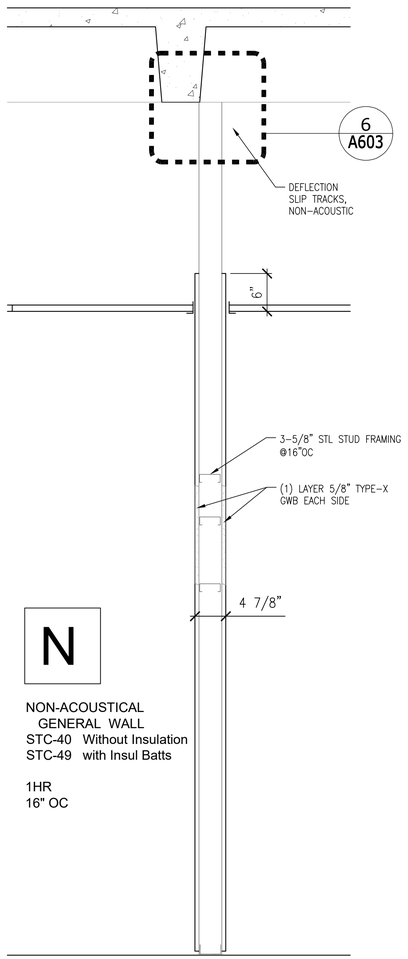

N

NON-ACOUSTICAL
GENERAL WALL
STC-40 Without Insulation
STC-49 with Insul Batts

1HR
16" OC

N WALL TYPES
1" = 1'-0"

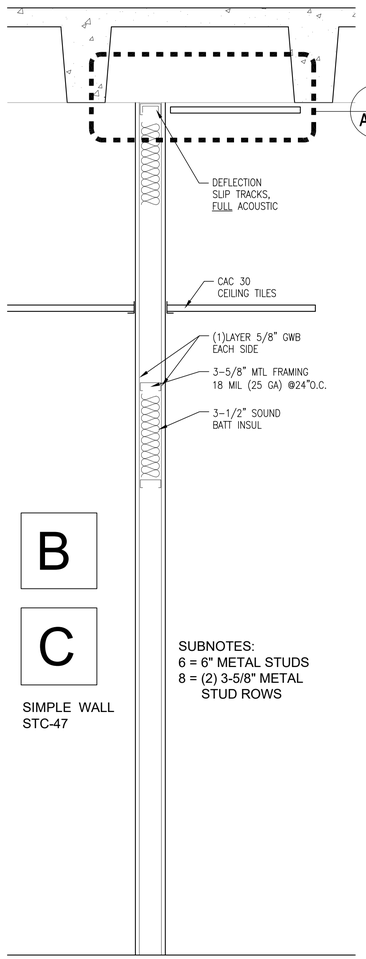

B

C

SUBNOTES:
6 = 6" METAL STUDS
8 = (2) 3-5/8" METAL
STUD ROWS

SIMPLE WALL
STC-47

B WALL TYPES
1" = 1'-0"

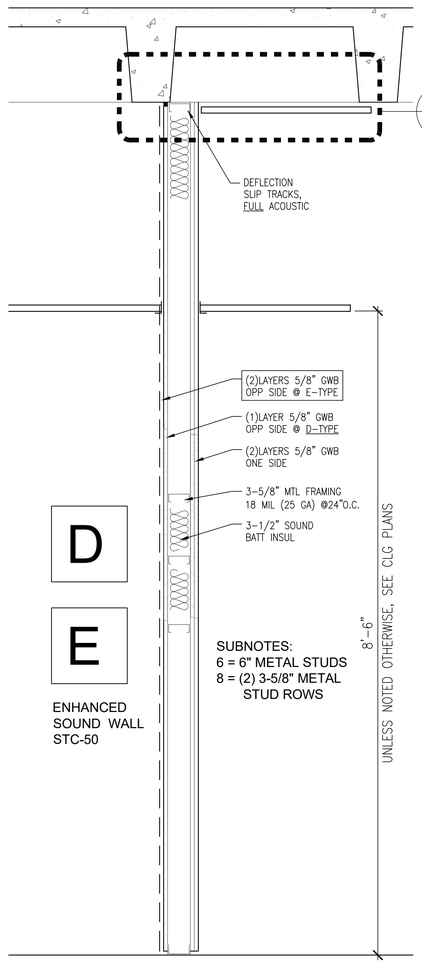

D

E

SUBNOTES:
6 = 6" METAL STUDS
8 = (2) 3-5/8" METAL
STUD ROWS

ENHANCED
SOUND WALL
STC-50

D WALL TYPES
1" = 1'-0"

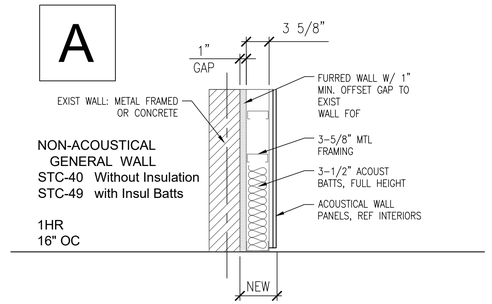

NON-ACOUSTICAL
GENERAL WALL
STC-40 Without Insulation
STC-49 with Insul Batts

1HR
16" OC

A FURRED WALL AT EXIST
1" = 1'-0"

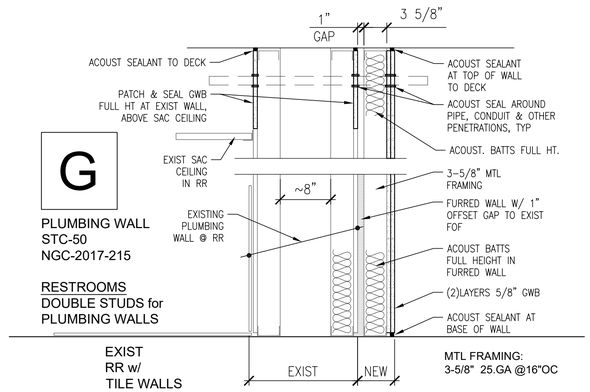

G

PLUMBING WALL
STC-50
NGC-2017-215

RESTROOMS
DOUBLE STUDS for
PLUMBING WALLS

EXIST
RR w/
TILE WALLS

MTL FRAMING:
3-5/8" 25.GA @16"OC

G EXIST PLUMBING WALL w/ FURRED WALL
1" = 1'-0"

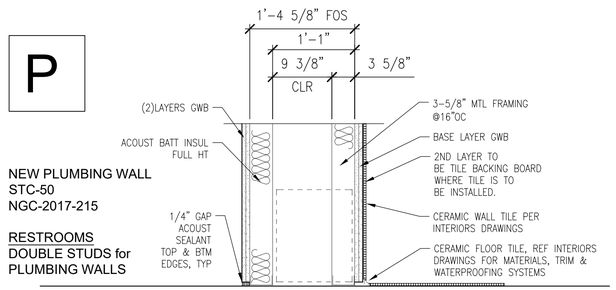

P

NEW PLUMBING WALL
STC-50
NGC-2017-215

RESTROOMS
DOUBLE STUDS for
PLUMBING WALLS

P NEW PLUMBING WALL
1" = 1'-0"

-- NOT USED
1" = 1'-0"

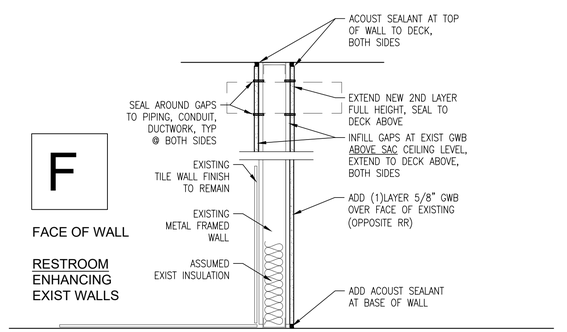

F

FACE OF WALL

RESTROOM
ENHANCING
EXIST WALLS

EXIST
RR w/
TILE WALLS

F FURRING @ EXIST WALL
1" = 1'-0"

Portland State
UNIVERSITY

PSU CAPITAL PROJECTS & CONSTRUCTION

RMNC

RICHARD & MAURINE
NEUBERGER CENTER

4TH FLOOR SPHR
INTERIOR REMODEL

PSU CAMPUS | BLOCK: 087
1600 SW 4TH AVENUE
PORTLAND, OREGON 97201

REGISTERED ARCHITECT
ARI-11654
GERALD R GOTSCHALL
PORTLAND, OREGON
STATE OF OREGON

Exp. 12/31/2026

ISSUED FOR BID & PERMIT

9/4/2026

HALF SIZE WHEN PRINTED AT 11X17

Sheet Title :

WALL TYPES

Revisions :	Date :
*	2026

Drawn : NR Checked : GRG

Sheet # : **A402**

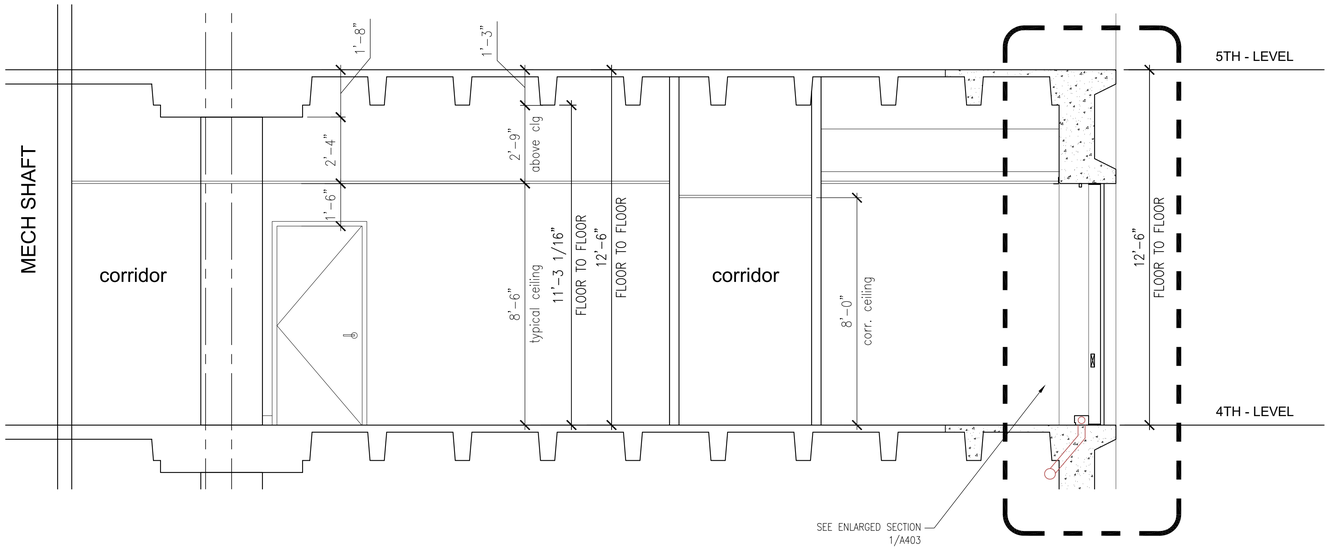

2 TYPICAL FLOOR SECTION
3/8" = 1'-0"

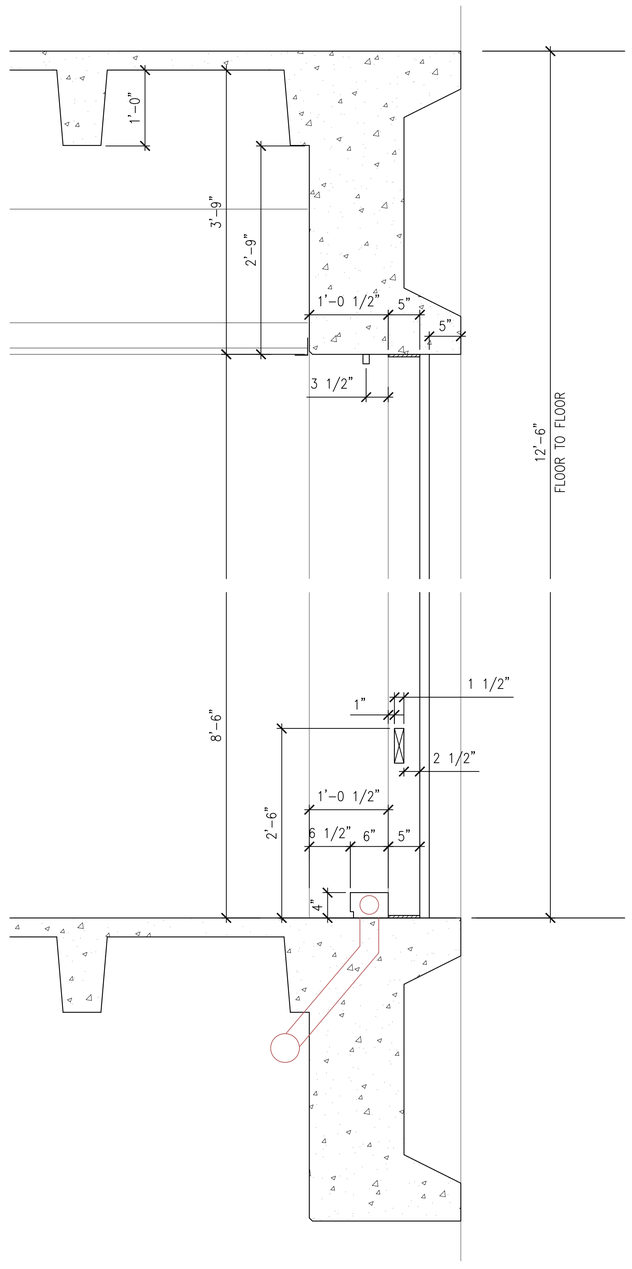

1 WALL SECTION @ EXTERIOR WALL
3/8" = 1'-0"

Portland State UNIVERSITY

PSU CAPITAL PROJECTS & CONSTRUCTION

RMNC

RICHARD & MAURINE NEUBERGER CENTER

4TH FLOOR SPHR
INTERIOR REMODEL

PSU CAMPUS | BLOCK: 087
1600 SW 4TH AVENUE
PORTLAND, OREGON 97201

REGISTERED ARCHITECT
ARI-11654
GERALD R GOTSCHALL
PORTLAND, OREGON
STATE OF OREGON
Exp. 12/31/2026

ISSUED FOR BID & PERMIT

9/4/2026

HALF SIZE WHEN PRINTED AT 11X17

Sheet Title :
SECTIONS

Revisions :	Date :
*	2026

Drawn : NR
Checked : GRG

Sheet # :
A403

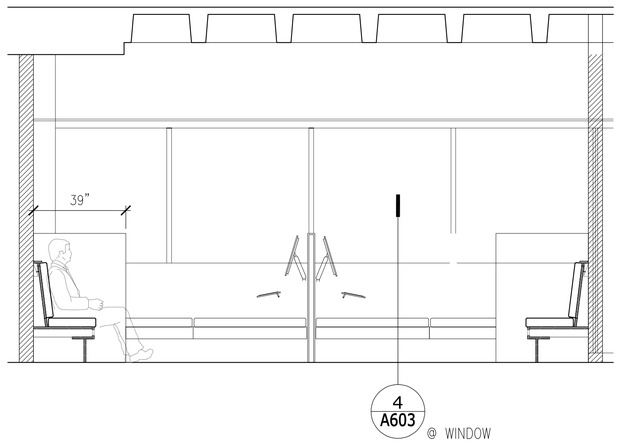

1 STUDENT VIEWING ROOM
3/8" = 1'-0"

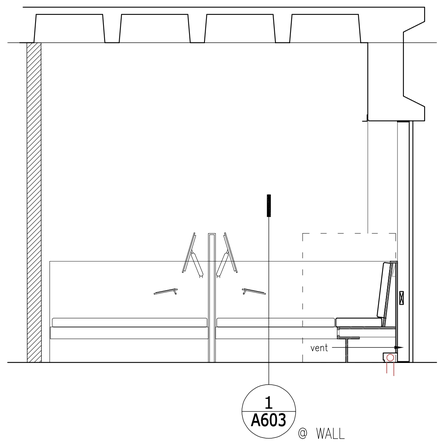

2 STUDENT VIEWING ROOM
3/8" = 1'-0"

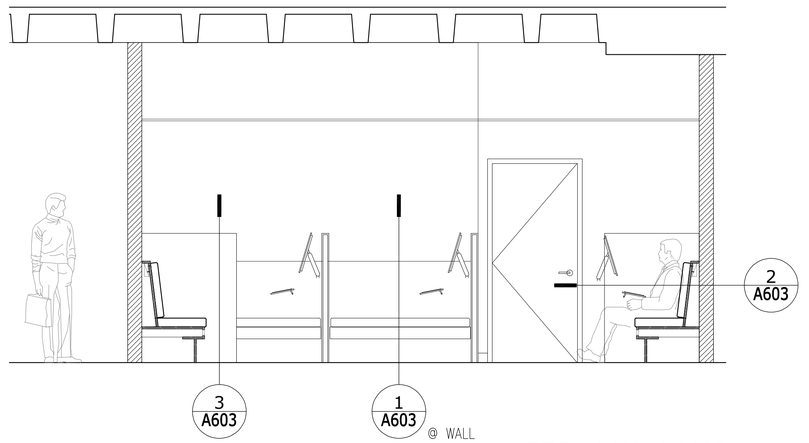

REF. PLAN: 2/A305

3 STUDENT VIEWING ROOM
3/8" = 1'-0"

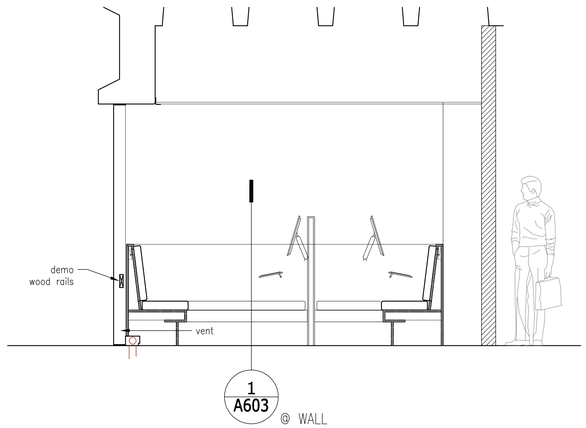

4 STUDENT VIEWING ROOM
3/8" = 1'-0"

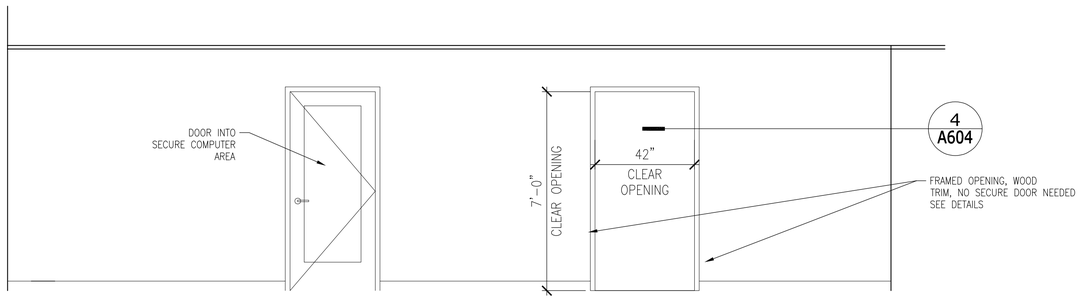

5 Grad Lounge - North Wall
3/8" = 1'-0"

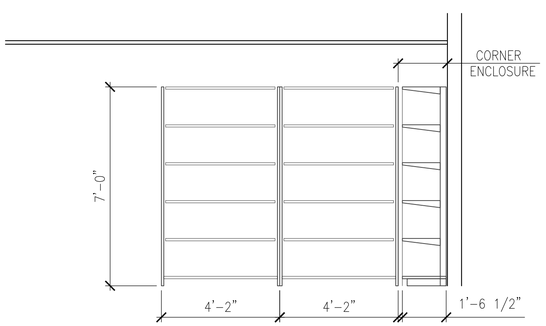

6 Toy Workroom - Shelving Layout
3/8" = 1'-0"

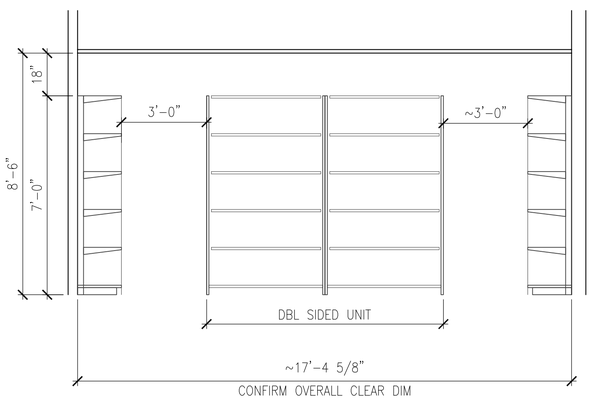

7 Toy Workroom - Shelving Layout
3/8" = 1'-0"

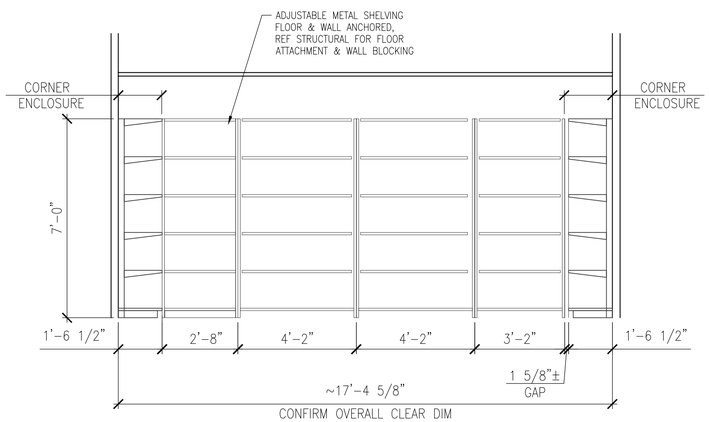

REF. PLAN: 1/A302

8 Toy Workroom - Shelving Layout
3/8" = 1'-0"

Portland State UNIVERSITY
PSU CAPITAL PROJECTS & CONSTRUCTION

RMNC
RICHARD & MAURINE NEUBERGER CENTER

4TH FLOOR SPHR
INTERIOR REMODEL

PSU CAMPUS | BLOCK: 087
1600 SW 4TH AVENUE
PORTLAND, OREGON 97201

REGISTERED ARCHITECT
ARI-11654
GERALD R GOTSCHALL
PORTLAND, OREGON
STATE OF OREGON
Exp. 12/31/2026

ISSUED FOR BID & PERMIT

9/4/2026
HALF SIZE WHEN PRINTED AT 11X17

Sheet Title :
INTERIOR ELEVATIONS

Revisions : *
Date : 2026

Drawn : NR
Checked : GRG

Sheet # :
A501

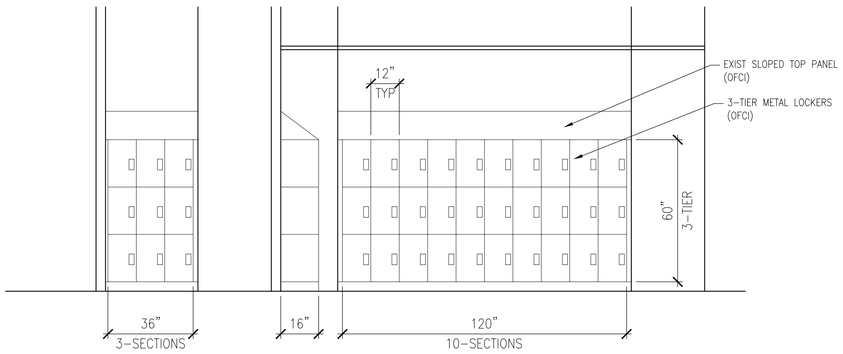

1 LOCKER ALCOVE
3/8" = 1'-0"

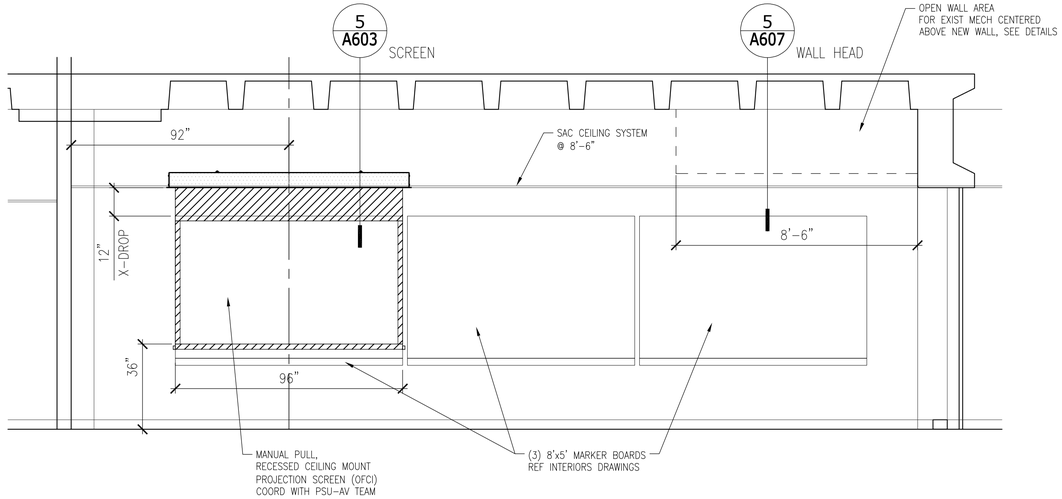

2 Classroom - Teaching Wall 465 (466 Sim)
3/8" = 1'-0"

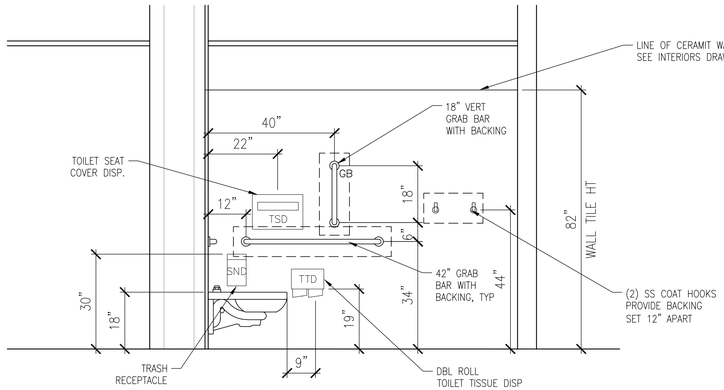

3 RESTROOMS - 457, 458
3/8" = 1'-0"

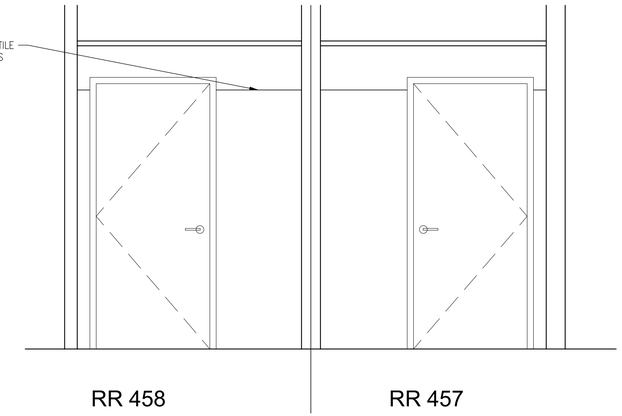

4 RESTROOMS - 457, 458
3/8" = 1'-0"

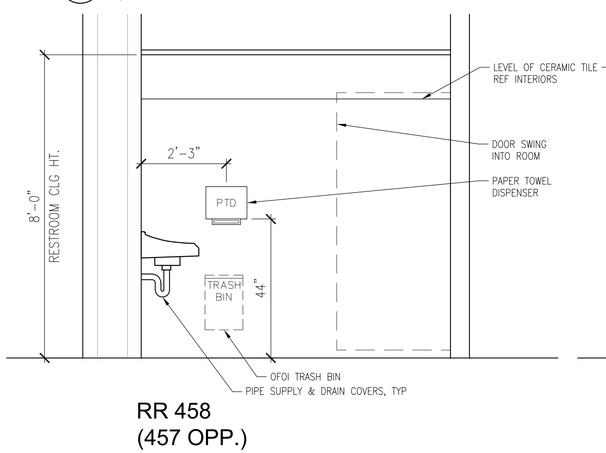

5 RESTROOMS - 457, 458
3/8" = 1'-0"

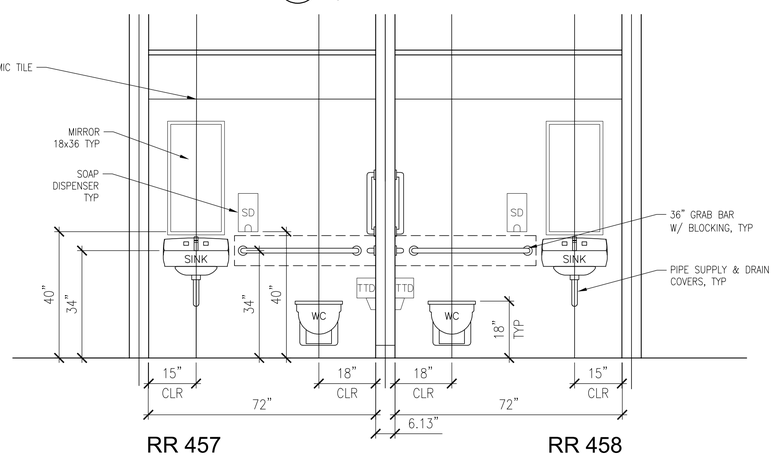

6 RESTROOMS - 457, 458
3/8" = 1'-0"

Portland State UNIVERSITY
PSU CAPITAL PROJECTS & CONSTRUCTION

RMNC
RICHARD & MAURINE NEUBERGER CENTER

4TH FLOOR SPHR
INTERIOR REMODEL

PSU CAMPUS | BLOCK: 087
1600 SW 4TH AVENUE
PORTLAND, OREGON 97201

REGISTERED ARCHITECT
ARI-11654
GERALD R GOTSCHALL
PORTLAND, OREGON
STATE OF OREGON
Exp. 12/31/2026

ISSUED FOR BID & PERMIT

9/4/2026
HALF SIZE WHEN PRINTED AT 11X17

Sheet Title :
INTERIOR ELEVATIONS

Revisions :	Date :
*	2026

Drawn : NR Checked : GRG

Sheet # : **A502**

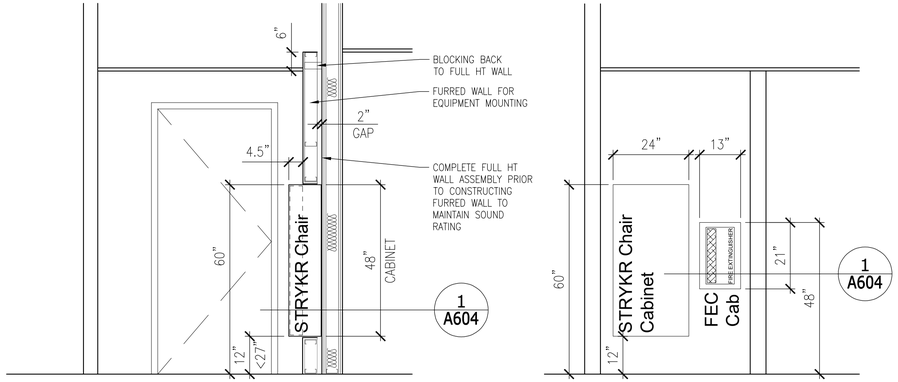

1 CORRIDOR - C415
1/2" = 1'-0"

2 CORRIDOR - C415
1/2" = 1'-0"

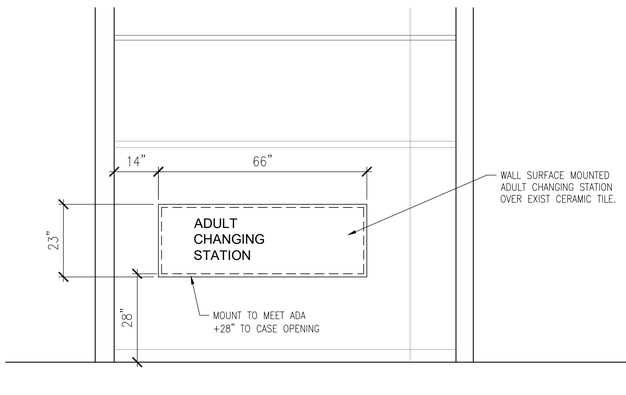

EXISTING
RR

3 EXIST RR - CHANGING TABLE
1/2" = 1'-0"

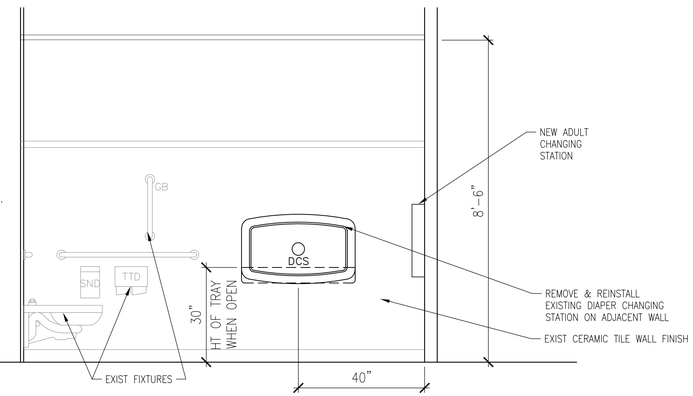

EXISTING
RR

4 EXIST RR - CHANGING TABLE
1/2" = 1'-0"

Portland State UNIVERSITY
PSU CAPITAL PROJECTS & CONSTRUCTION

RMNC
RICHARD & MAURINE NEUBERGER CENTER

4TH FLOOR SPHR
INTERIOR REMODEL

PSU CAMPUS | BLOCK: 087
1600 SW 4TH AVENUE
PORTLAND, OREGON 97201

REGISTERED ARCHITECT
ARI-11654
GERALD R GOTSCHALL
PORTLAND, OREGON
STATE OF OREGON
Exp. 12/31/2026

ISSUED FOR BID & PERMIT

9/4/2026
HALF SIZE WHEN PRINTED AT 11X17

Sheet Title :
INTERIOR ELEVATIONS

Revisions :	Date :
*	2026

Drawn : NR
Checked : GRG

Sheet # :
A503

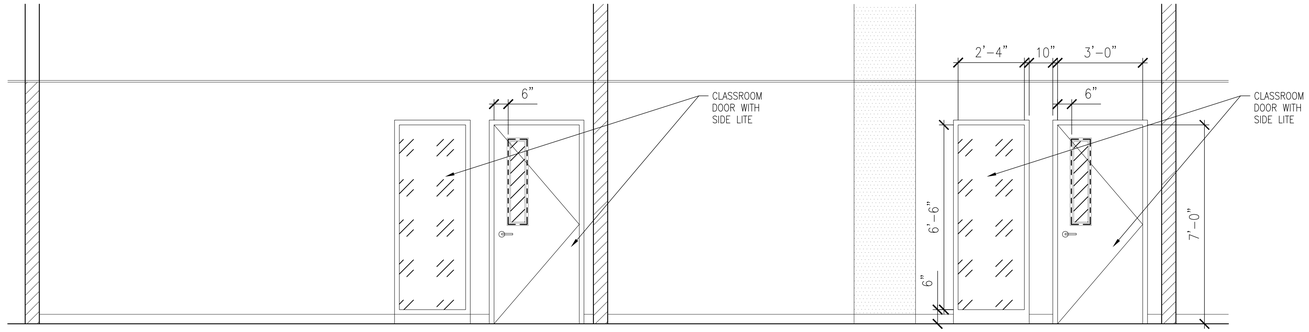

1 Classroom - Side Wall 465, 466
3/8" = 1'-0"

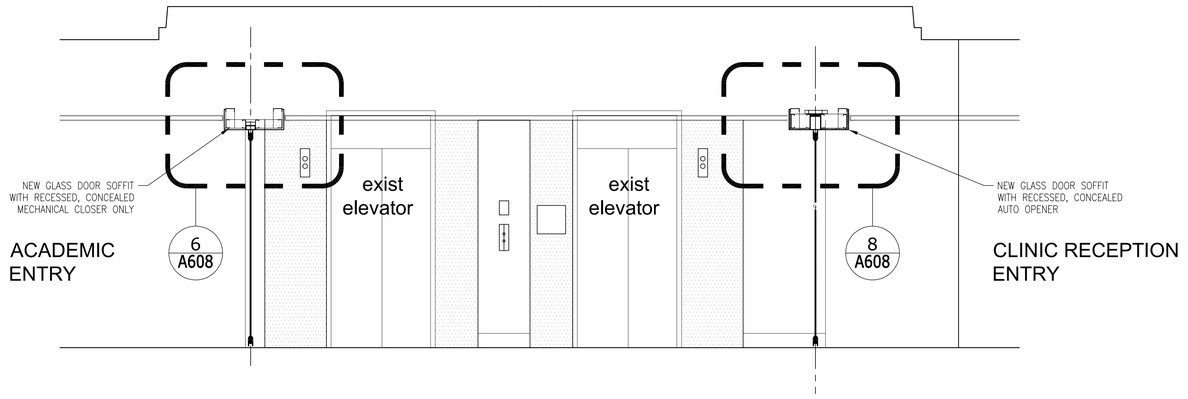

2 ELEVATOR LOBBY - Looking North
3/8" = 1'-0"

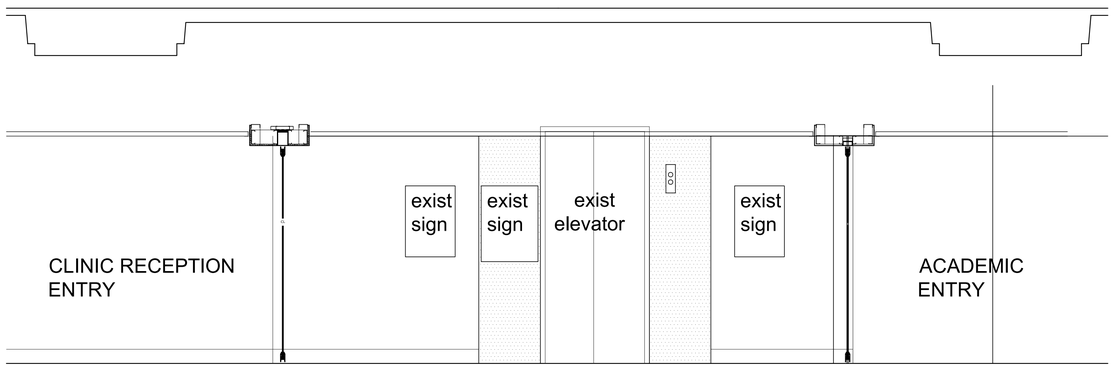

3 ELEVATOR LOBBY - Looking South
3/8" = 1'-0"

Portland State UNIVERSITY
PSU CAPITAL PROJECTS & CONSTRUCTION

RMNC
RICHARD & MAURINE NEUBERGER CENTER

4TH FLOOR SPHR
INTERIOR REMODEL

PSU CAMPUS | BLOCK: 087
1600 SW 4TH AVENUE
PORTLAND, OREGON 97201

REGISTERED ARCHITECT
ARI-11654
GERALD R GOTSCHALL
PORTLAND, OREGON
STATE OF OREGON
Exp. 12/31/2026

ISSUED FOR BID & PERMIT

9/4/2026
HALF SIZE WHEN PRINTED AT 11X17

Sheet Title :
INTERIOR ELEVATIONS

Revisions : *
Date : 2026

Drawn : NR
Checked : GRG

Sheet # :
A504

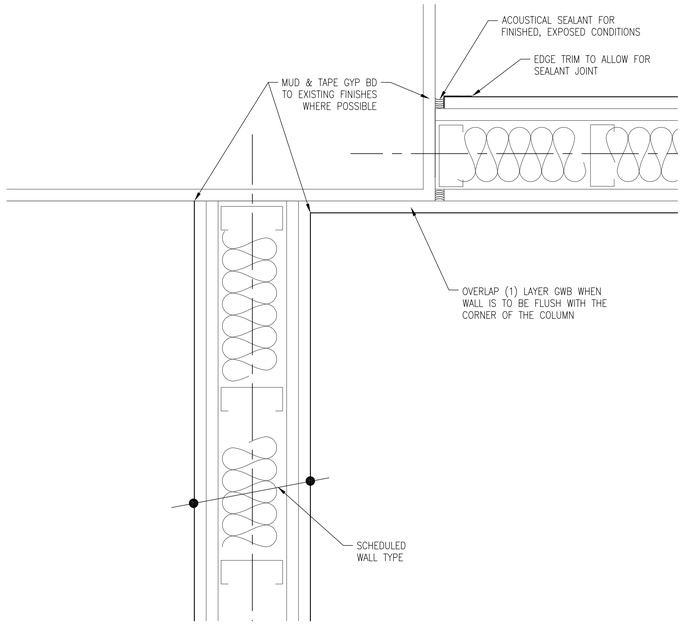

1 WALL @ EXISTING COLUMN
3" = 1'-0"

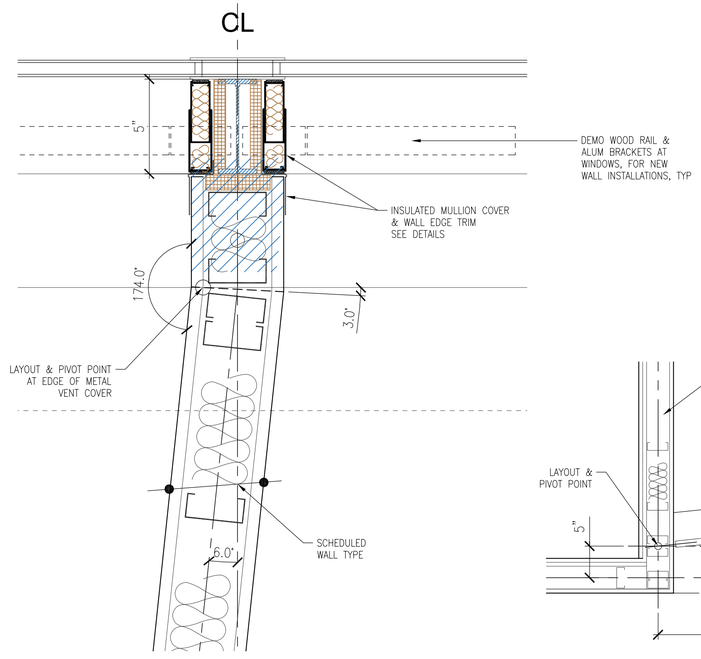

2 ANGLED WALL @ WINDOW
3" = 1'-0"

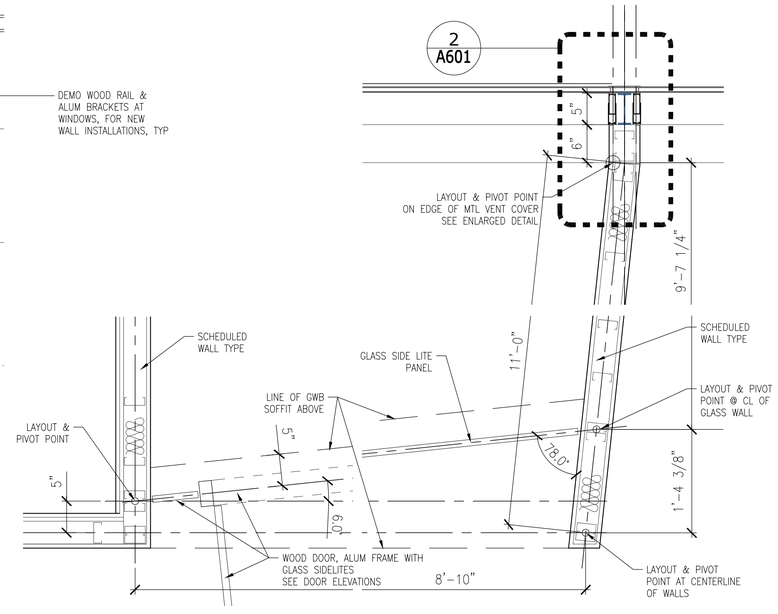

3 ANGLED WALL - MEETING ROOM 461
1" = 1'-0"

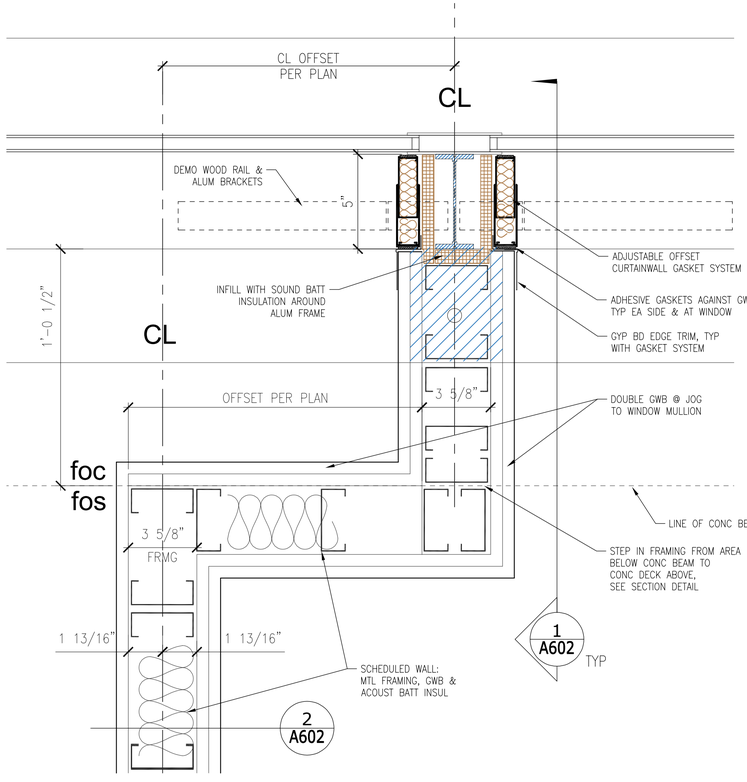

4 OFFSET WALL @ WINDOW MULLION
3" = 1'-0"

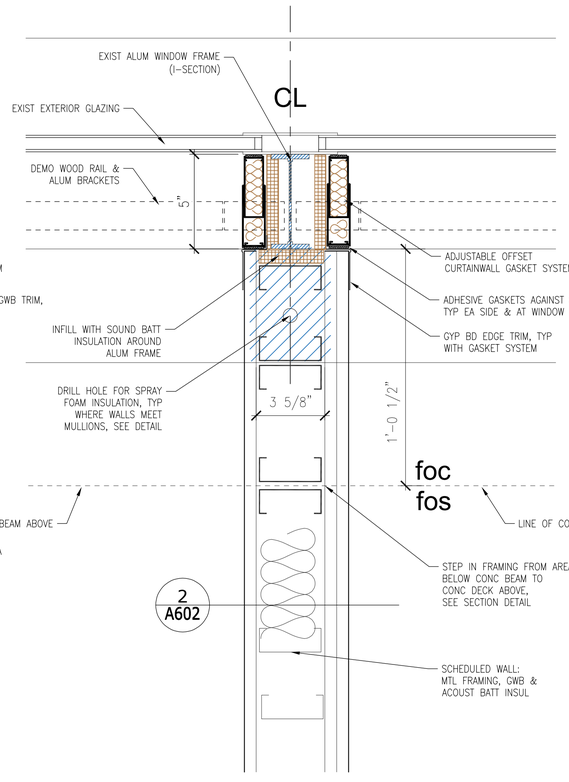

5 WALL @ WINDOW MULLION
3" = 1'-0"

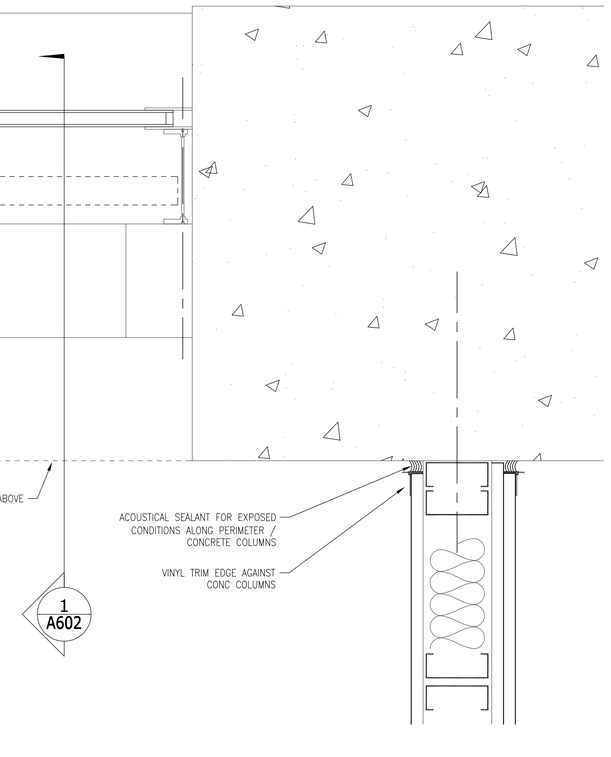

6 WALL @ CONCRETE COLUMN
3" = 1'-0"

Portland State UNIVERSITY

PSU CAPITAL PROJECTS & CONSTRUCTION

RMNC

RICHARD & MAURINE NEUBERGER CENTER

4TH FLOOR SPHR
INTERIOR REMODEL

PSU CAMPUS | BLOCK: 087
1600 SW 4TH AVENUE
PORTLAND, OREGON 97201

REGISTERED ARCHITECT
ARI-11654
GERALD R GOTSCHALL
PORTLAND, OREGON
STATE OF OREGON

Exp. 12/31/2026

ISSUED FOR BID & PERMIT

9/4/2026

HALF SIZE WHEN PRINTED AT 11X17

Sheet Title :
DETAILS

Revisions :	Date :
*	2025

Drawn : NR
Checked : GRG

Sheet # :
A601

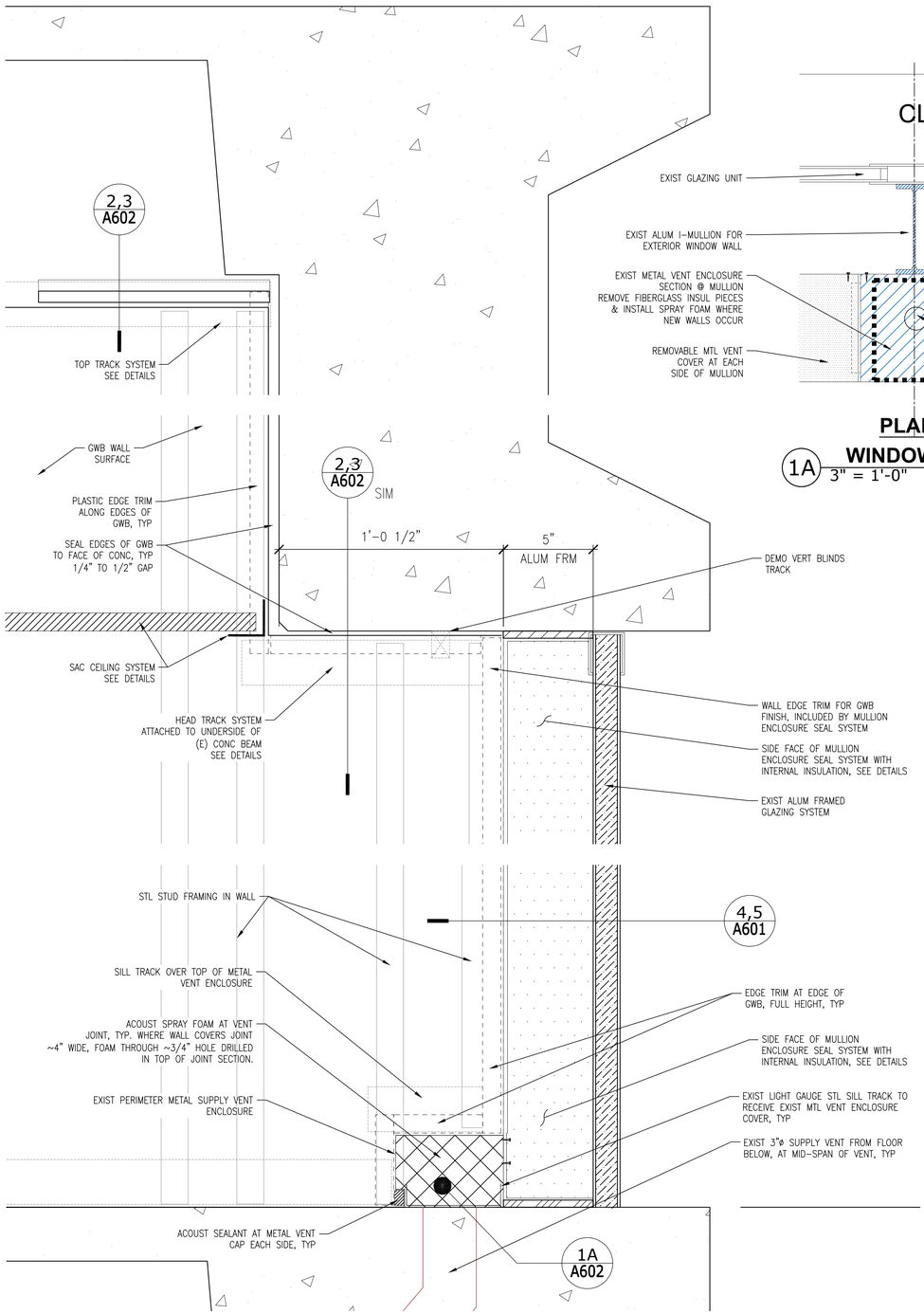

1 PARTITION WALL TO EXTERIOR WINDOW
3" = 1'-0"

PLAN @
WINDOW VENT
1A 3" = 1'-0"

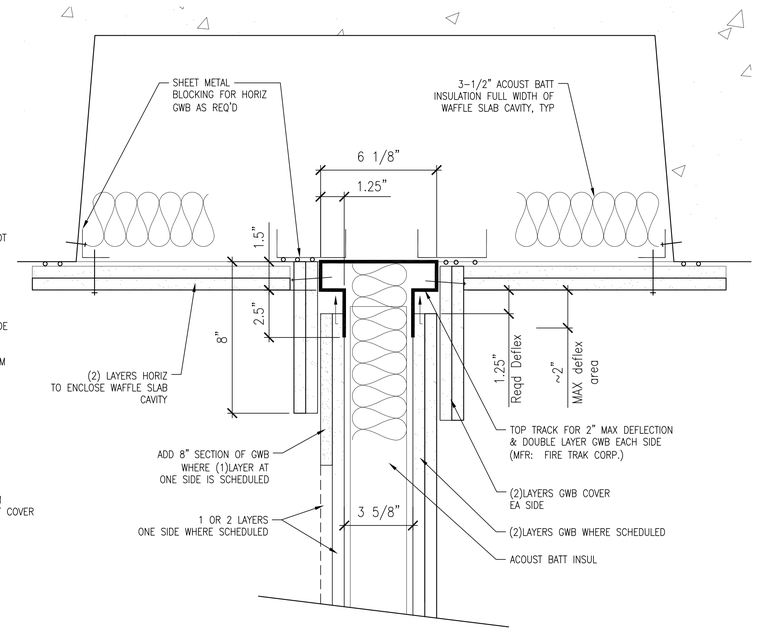

2 WALL HEAD TERMINATION @ SLAB - (2) LAYERS GWB
3" = 1'-0"

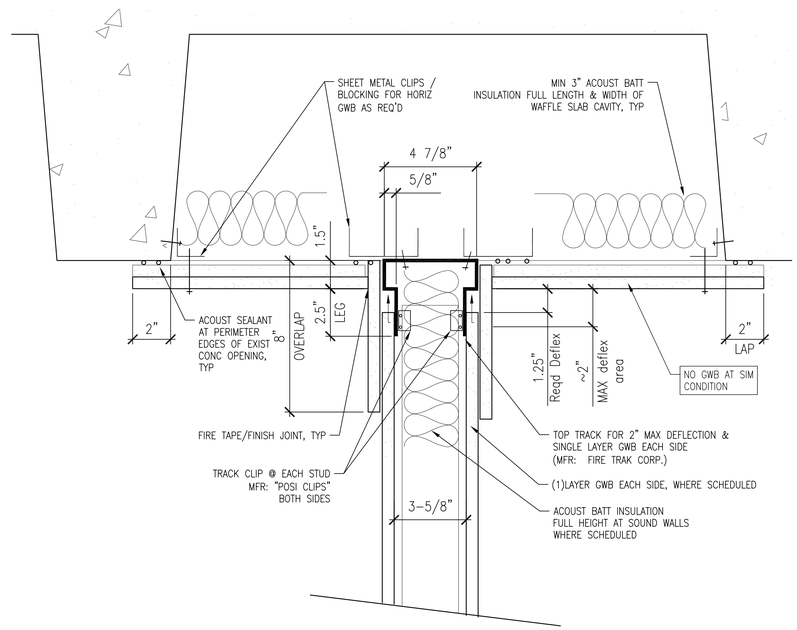

3 WALL HEAD TERMINATION @ SLAB - (1) LAYER GWB
3" = 1'-0"

Portland State
UNIVERSITY
PSU CAPITAL PROJECTS & CONSTRUCTION

RMNC
RICHARD & MAURINE NEUBERGER CENTER

4TH FLOOR SPHR
INTERIOR REMODEL

PSU CAMPUS | BLOCK: 087
1600 SW 4TH AVENUE
PORTLAND, OREGON 97201

REGISTERED ARCHITECT
ARI-11654
GERALD R GOTSCHALL
PORTLAND, OREGON
STATE OF OREGON
Exp. 12/31/2026

ISSUED FOR BID & PERMIT

9/4/2026
HALF SIZE WHEN PRINTED AT 11X17

Sheet Title :
DETAILS

Revisions :	Date :
*	2026

Drawn : NR Checked : GRG

Sheet # :
A602

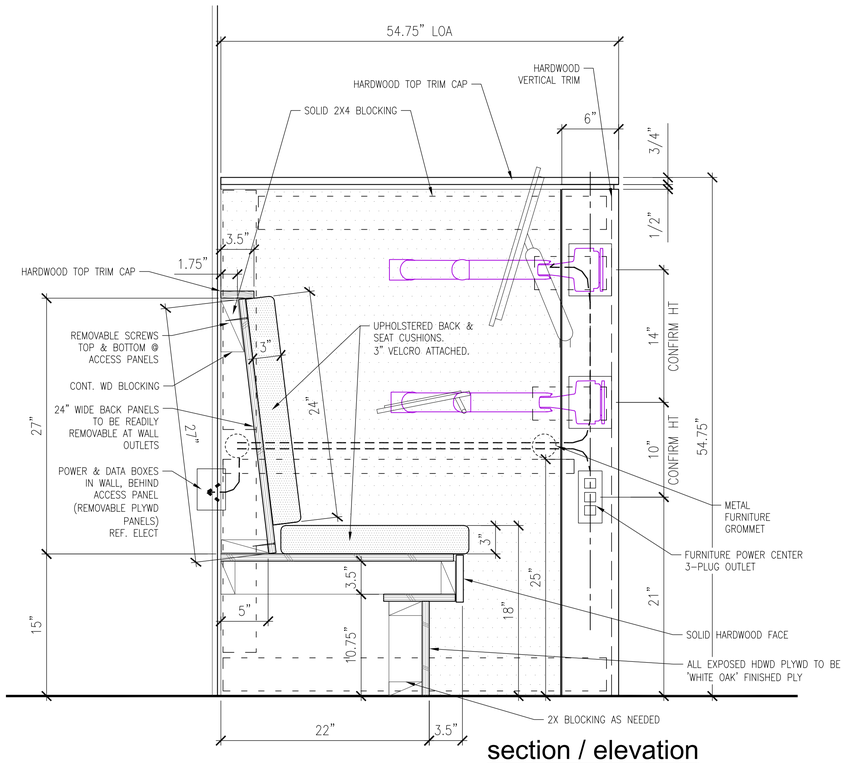

1 BENCH @ WALL
1 1/2" = 1'-0"

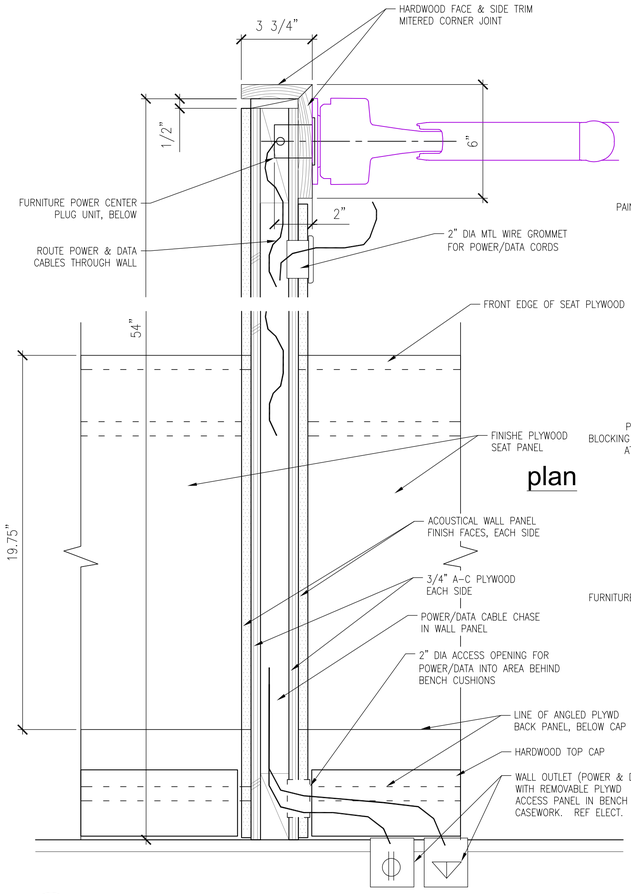

2 DIVIDER PANEL - PLAN
3" = 1'-0"

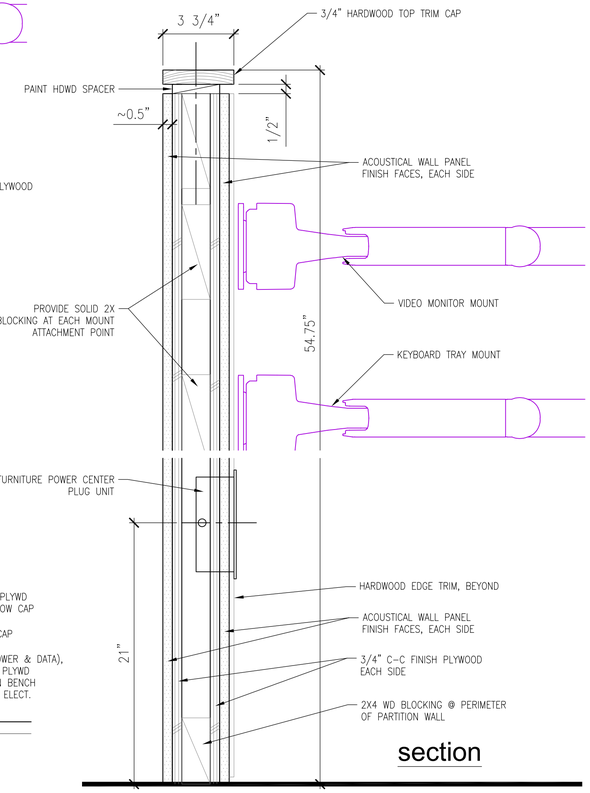

3 DIVIDER PANEL - SECTION
3/8" = 1'-0"

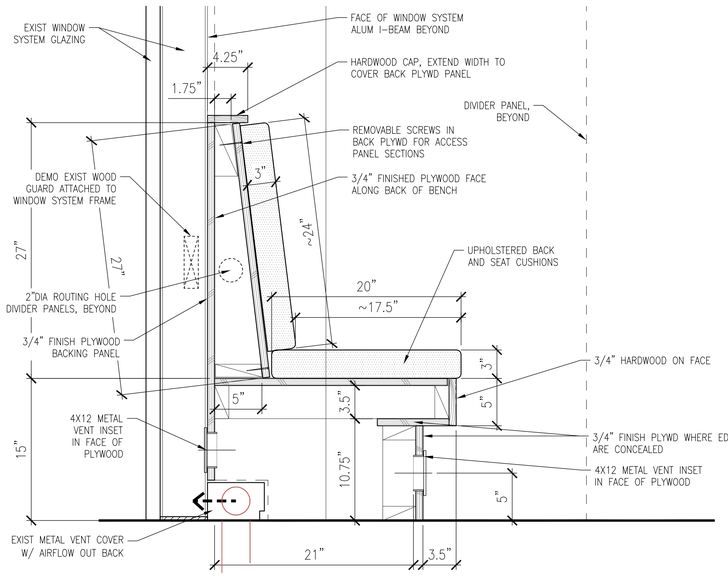

4 BENCH SECTION @ WINDOW
1 1/2" = 1'-0"

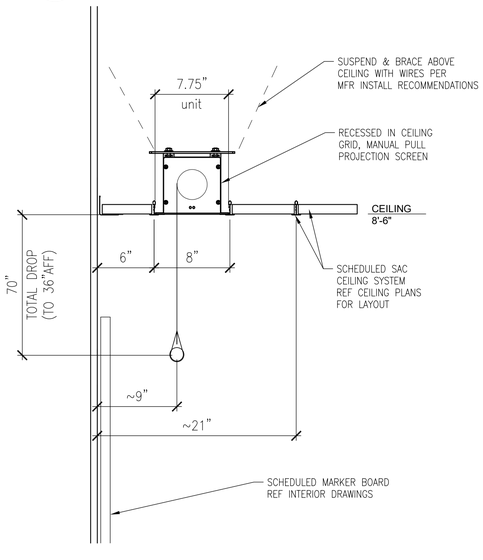

5 RECESSED PROJECTION SCREEN
1 1/2" = 1'-0"

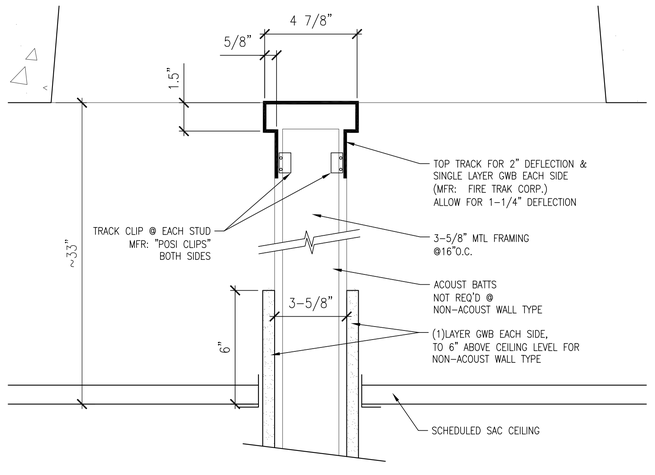

6 WALL HEAD TERMINATION @ SLAB - NON-ACOUSTICAL
3" = 1'-0"

Portland State UNIVERSITY

PSU CAPITAL PROJECTS & CONSTRUCTION

RMNC

RICHARD & MAURINE NEUBERGER CENTER

4TH FLOOR SPHR
INTERIOR REMODEL

PSU CAMPUS | BLOCK: 087
1600 SW 4TH AVENUE
PORTLAND, OREGON 97201

REGISTERED ARCHITECT
ARI-11654
GERALD R GOTSCHALL
PORTLAND, OREGON
STATE OF OREGON

Exp. 12/31/2026

ISSUED FOR BID & PERMIT

9/4/2026

HALF SIZE WHEN PRINTED AT 11X17

Sheet Title :

SECTIONS

Revisions :	Date :
*	2026

Drawn : NR Checked : GRG

Sheet # : **A603**

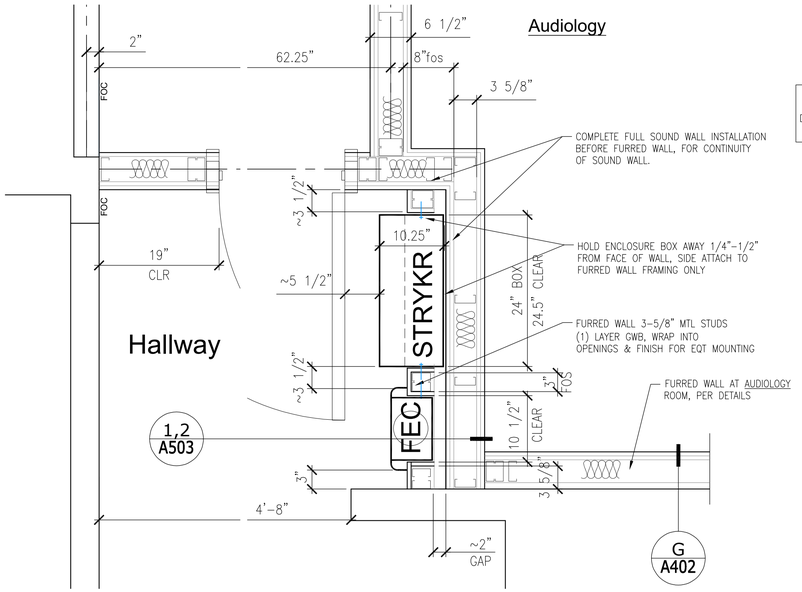

1 FURRED WALL AT RECESSED EQUIPMENT
1" = 1'-0"

2 FIRE EXTINGHISER CABINET - SEMI-RECESSED
1" = 1'-0"

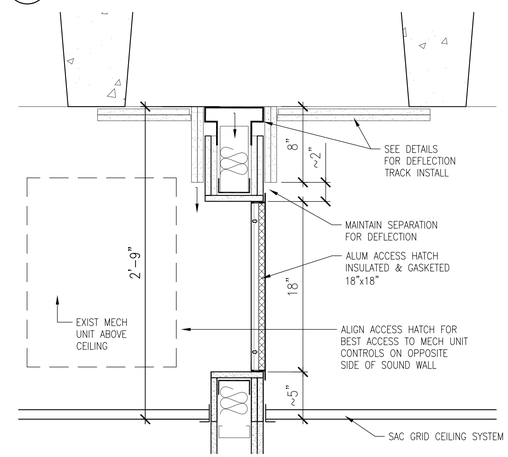

3 WALL ACCESS HATCH
1 1/2" = 1'-0"

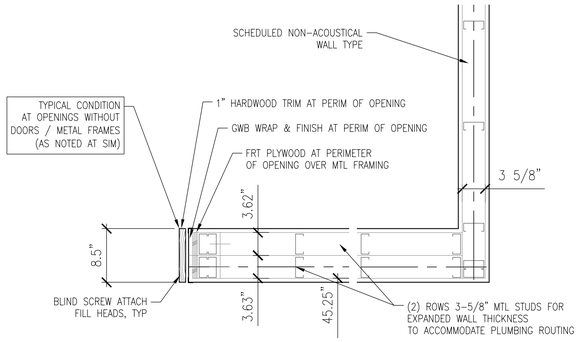

4 PLUMBING WALL & JAMB DETAIL
1" = 1'-0"

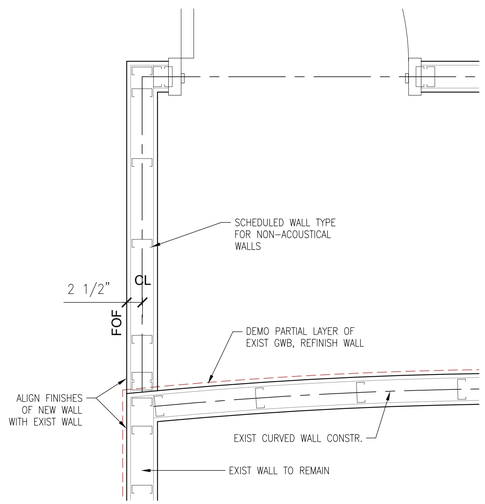

5 WALL TO EXIST
1" = 1'-0"

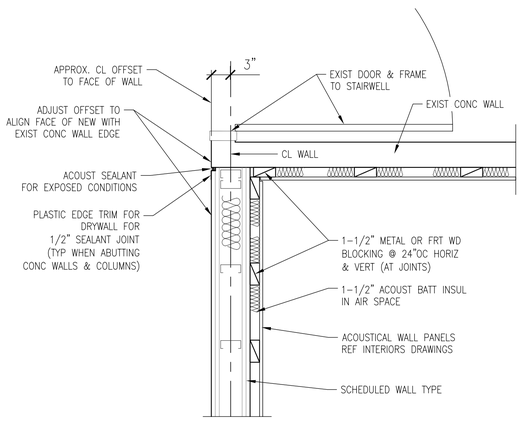

6 WALL DETAIL - FURRED ACOUSTICAL PANELS
1" = 1'-0"

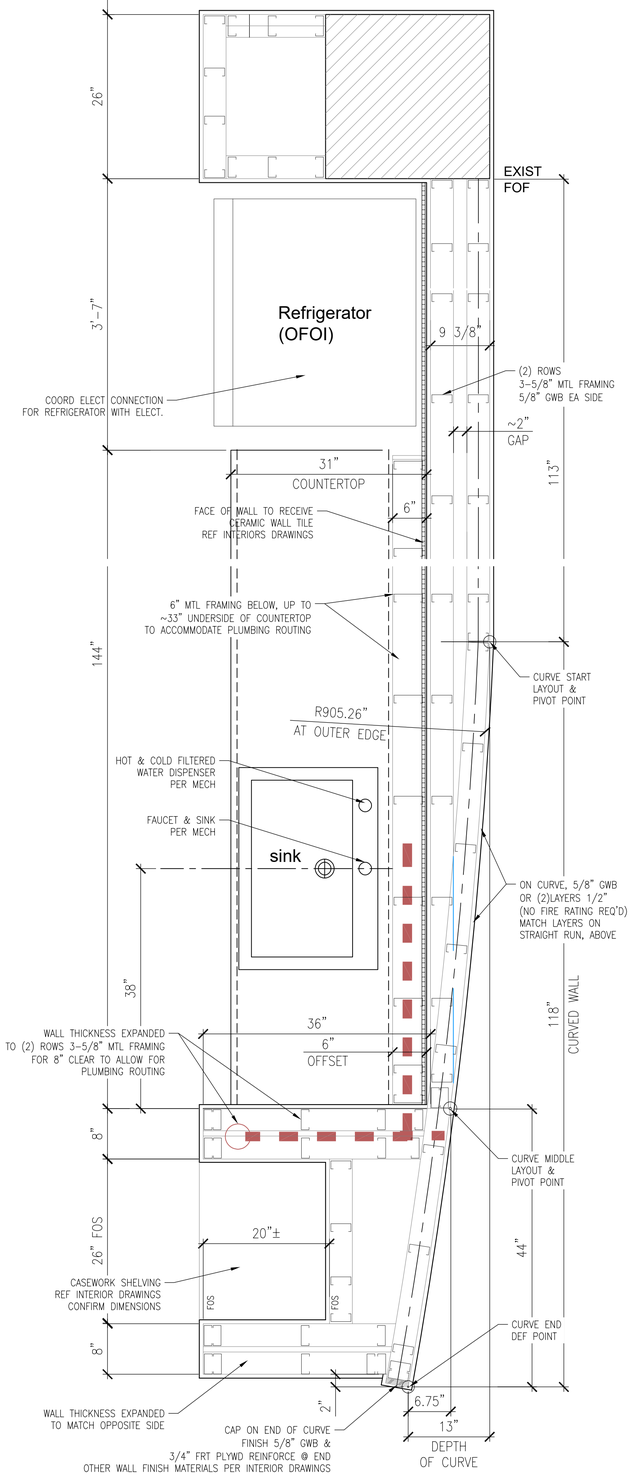

7 ACADEMIC AREA - KITCHEN WALL
1" = 1'-0"

Portland State UNIVERSITY

PSU CAPITAL PROJECTS & CONSTRUCTION

RMNC

RICHARD & MAURINE NEUBERGER CENTER

4TH FLOOR SPHR
INTERIOR REMODEL

PSU CAMPUS | BLOCK: 087
1600 SW 4TH AVENUE
PORTLAND, OREGON 97201

REGISTERED ARCHITECT
ARI-11654
GERALD R GOTSCHALL
PORTLAND, OREGON
STATE OF OREGON
Exp. 12/31/2026

ISSUED FOR BID & PERMIT

9/4/2026

HALF SIZE WHEN PRINTED AT 11X17

Sheet Title :
DETAILS

Revisions : *
Date : 2026

Drawn : NR
Checked : GRG

Sheet # :
A604

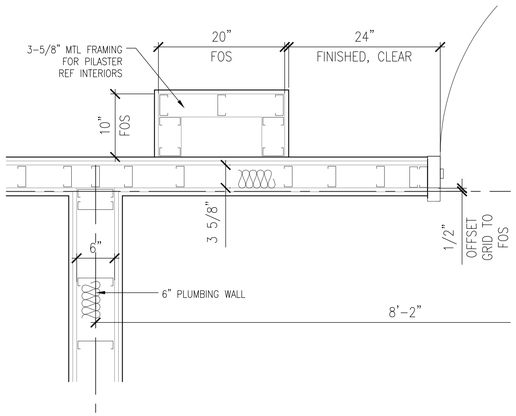

1 WALL DETAIL
1" = 1'-0"

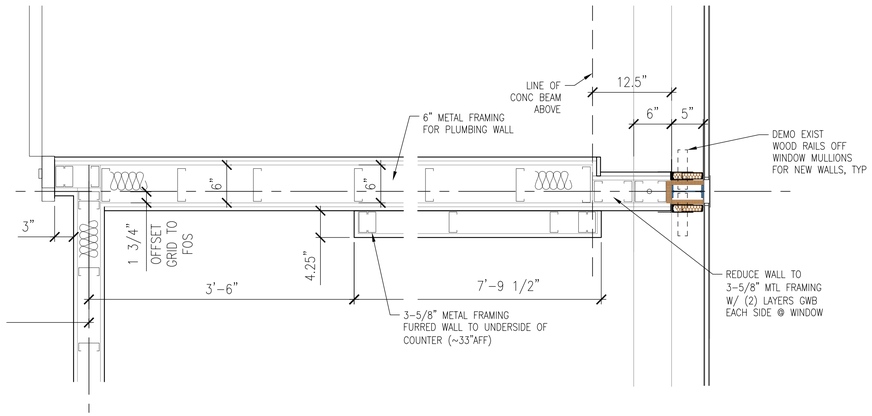

2 WALL DETAIL
1" = 1'-0"

3 WALL DETAIL
1" = 1'-0"

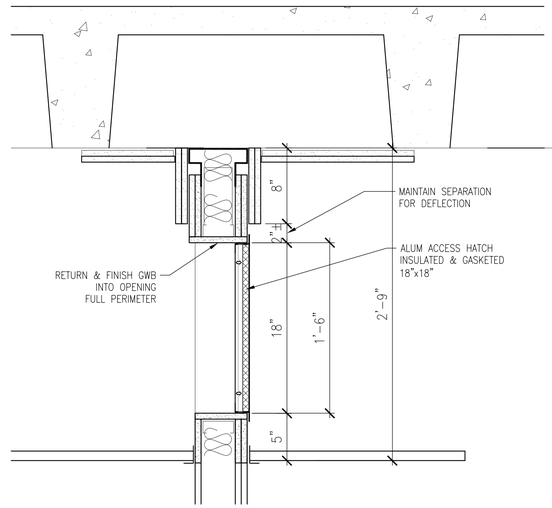

4 ACCESS HATCH
1 1/2" = 1'-0"

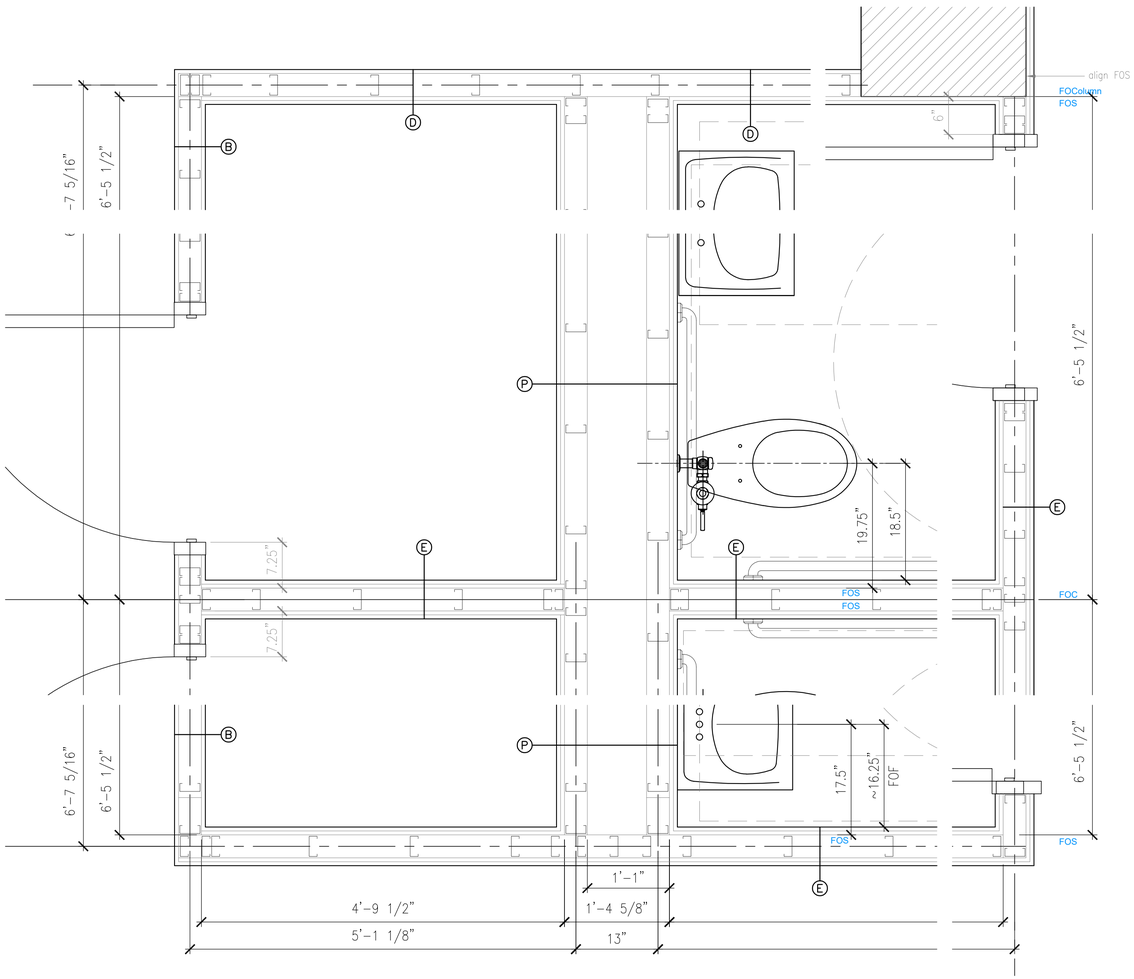

5 DETAILED PLAN - VIDEO RMS
1" = 1'-0"

6 DETAILED PLAN - NEW RR
1" = 1'-0"

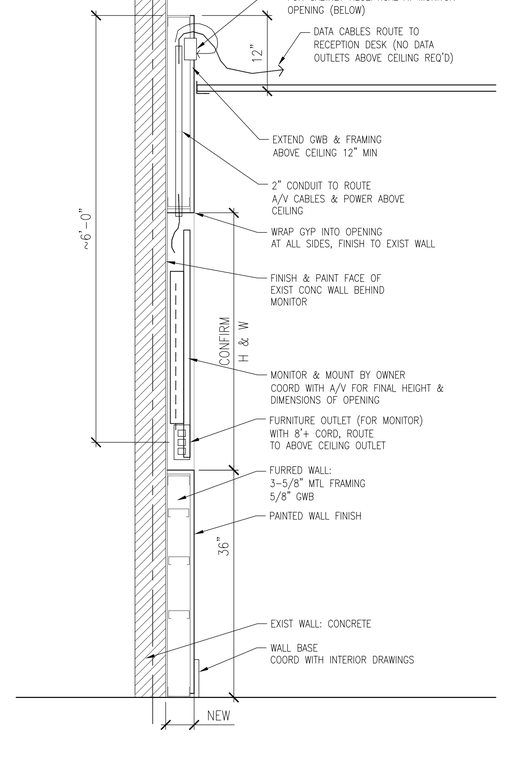

7 FURRED WALL @ CLINIC LOBBY AV MONITOR
1" = 1'-0"

Portland State UNIVERSITY

PSU CAPITAL PROJECTS & CONSTRUCTION

RMNC

RICHARD & MAURINE NEUBERGER CENTER

4TH FLOOR SPHR
INTERIOR REMODEL

PSU CAMPUS | BLOCK: 087
1600 SW 4TH AVENUE
PORTLAND, OREGON 97201

REGISTERED ARCHITECT
ARI-11654
GERALD R GOTSCHALL
PORTLAND, OREGON
STATE OF OREGON

Exp. 12/31/2026

ISSUED FOR BID & PERMIT

9/4/2026

HALF SIZE WHEN PRINTED AT 11X17

Sheet Title :

DETAILS

Revisions :	Date :
*	2026

Drawn : NR Checked : GRG

Sheet # :

A605

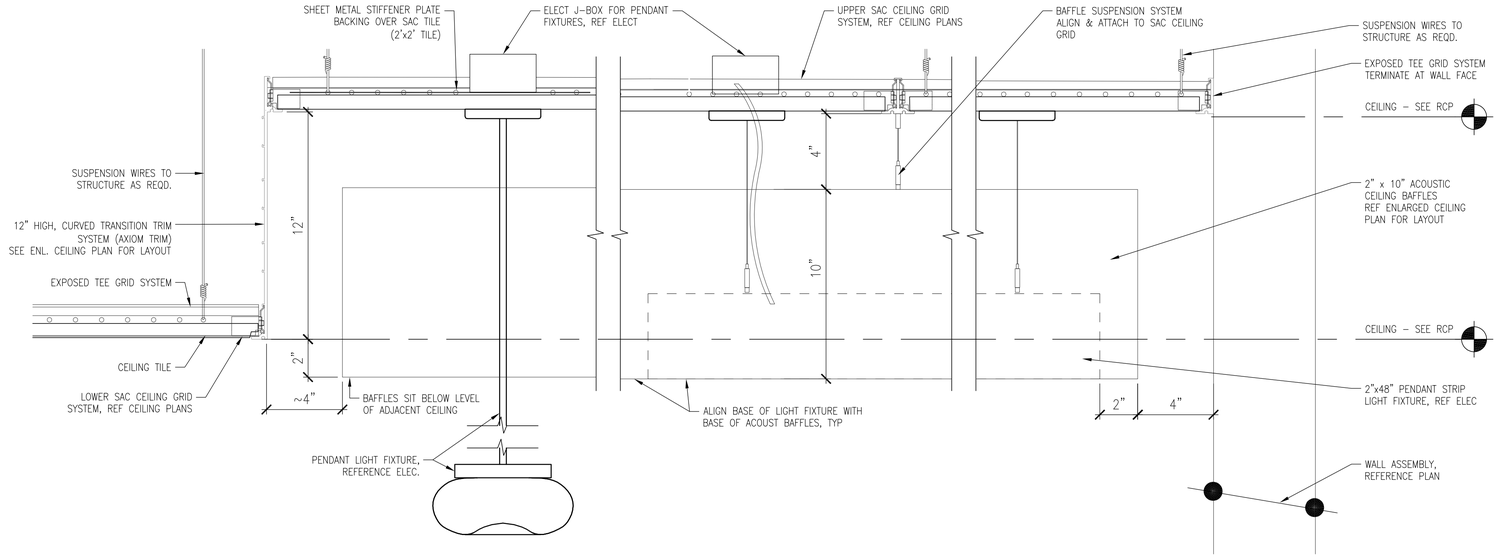

1 SECTION - CEILING TRANSITION @ CLINIC RECEPTION
3" = 1'-0"

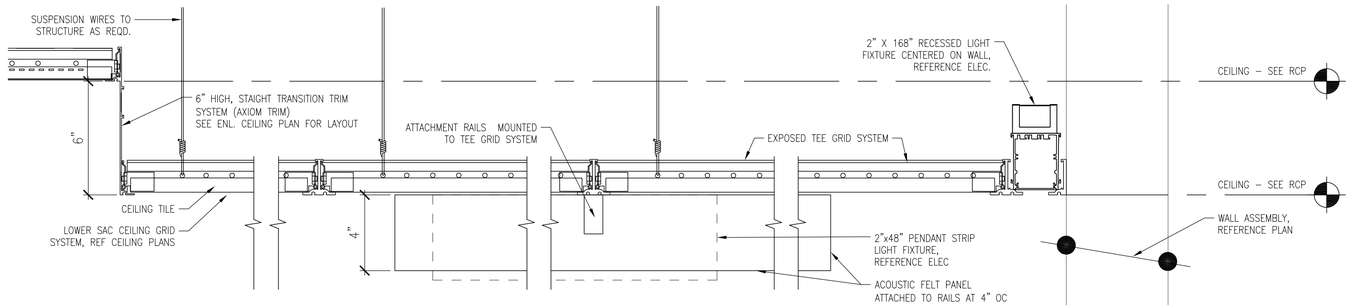

2 SECTION - CEILING TRANSITION @ STUDENT STUDY
3" = 1'-0"

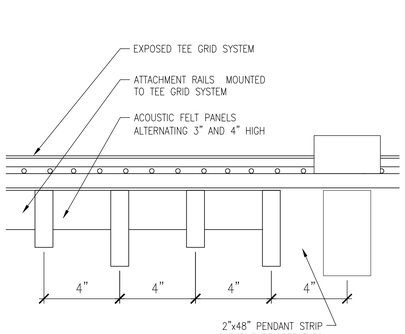

3 SECTION - CEILING TRANSITION @ STUDENT STUDY
3" = 1'-0"

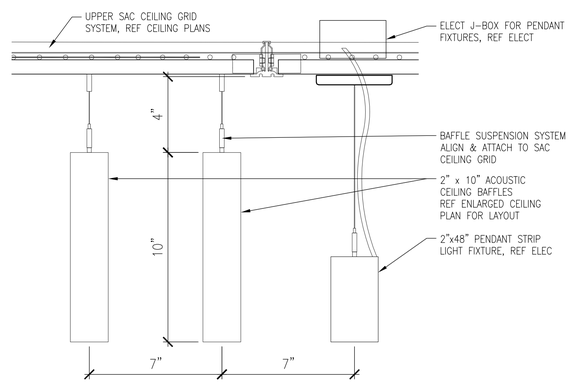

4 SECTION - CEILING TRANSITION @ CLINIC RECEPTION
3" = 1'-0"

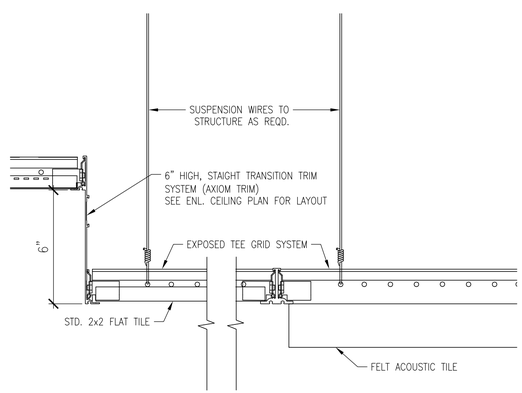

5 SECTION - CEILING TRANSITION @ YOUTH WAITING
3" = 1'-0"

Portland State UNIVERSITY
PSU CAPITAL PROJECTS & CONSTRUCTION

RMNC
RICHARD & MAURINE NEUBERGER CENTER

4TH FLOOR SPHR
INTERIOR REMODEL

PSU CAMPUS | BLOCK: 087
1600 SW 4TH AVENUE
PORTLAND, OREGON 97201

REGISTERED ARCHITECT
ARI-11654
GERALD R GOTSCHALL
PORTLAND, OREGON
STATE OF OREGON
Exp. 12/31/2026

ISSUED FOR BID & PERMIT

9/4/2026
HALF SIZE WHEN PRINTED AT 11X17

Sheet Title :
CEILING DETAILS

Revisions : *
Date : 2026

Drawn : NR
Checked : GRG

Sheet # :
A606

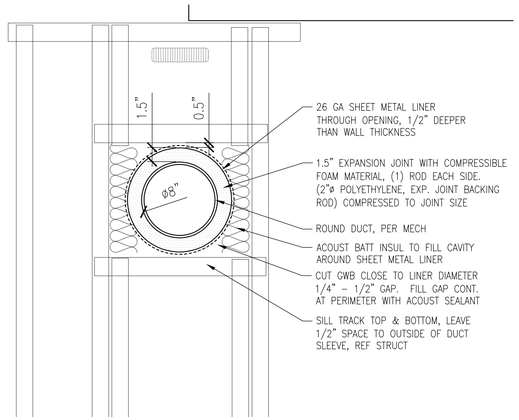

1 ROUND DUCT THRU WALL
3/8" = 1'-0"

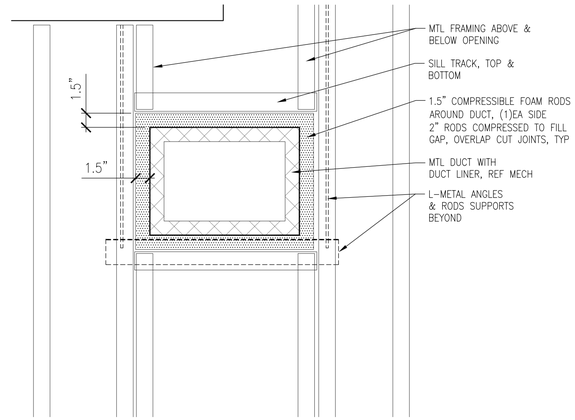

2 RECTANGULAR DUCT THRU WALL
3/8" = 1'-0"

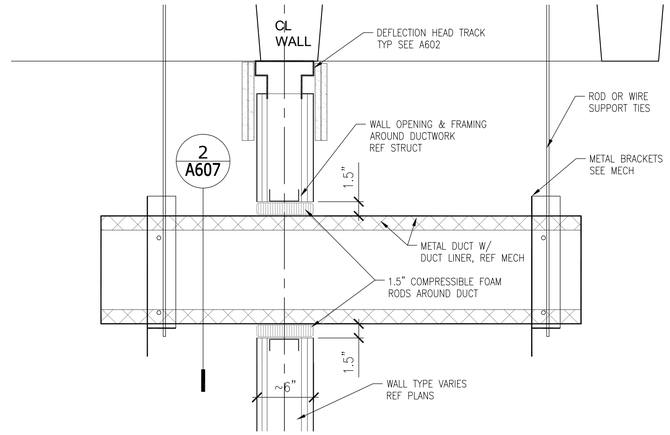

3 DUCT THRU WALL
3/8" = 1'-0"

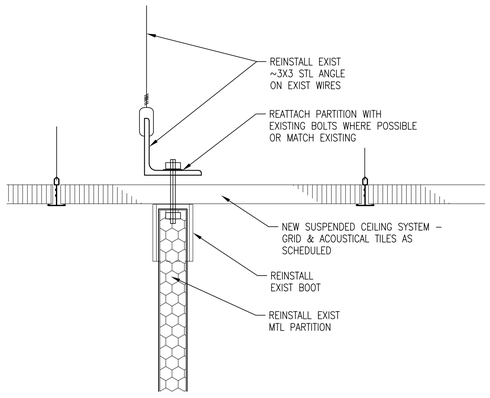

4 TOILET PARTITION CEILING SUPPORT
3" = 1'-0"

5 NOT USED
3/8" = 1'-0"

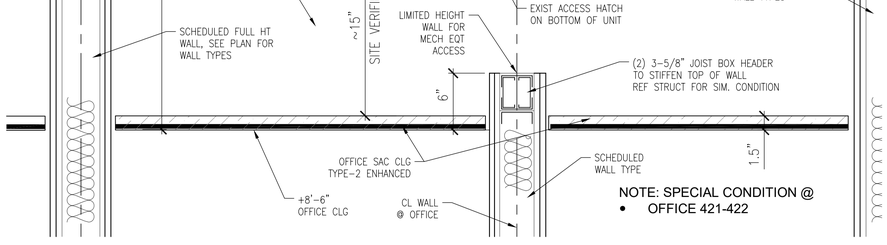

5 SECTION @ CEILING - OFFICE 421, 422 (SIM @ 463, 465)
1 1/2" = 1'-0"

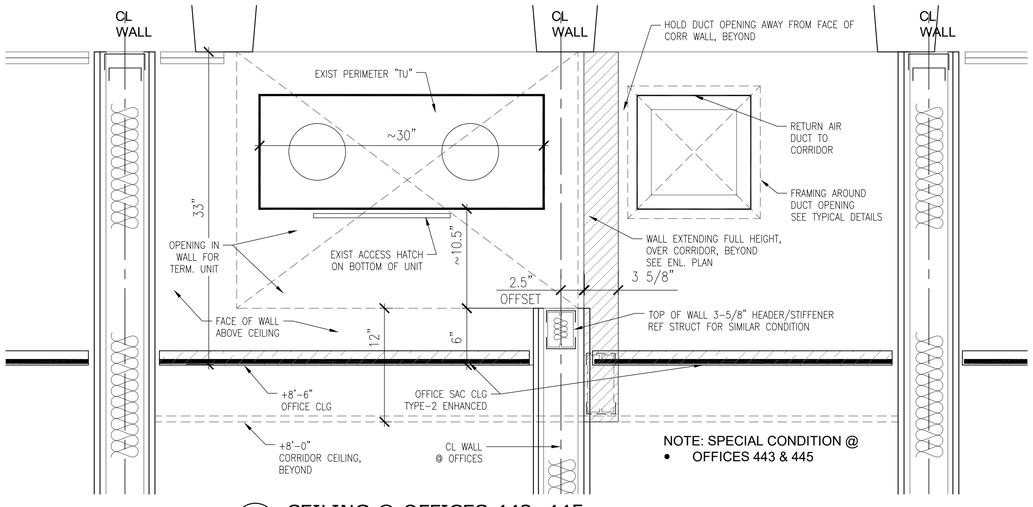

6 CEILING @ OFFICES 443, 445
1 1/2" = 1'-0"

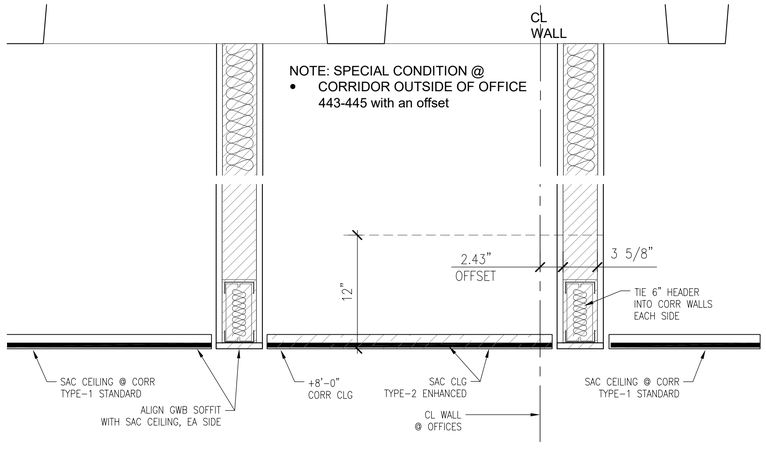

7 CEILING @ CORR - OUTSIDE OFFICES 443, 445
1 1/2" = 1'-0"

Portland State UNIVERSITY
PSU CAPITAL PROJECTS & CONSTRUCTION

RMNC
RICHARD & MAURINE NEUBERGER CENTER

4TH FLOOR SPHR
INTERIOR REMODEL

PSU CAMPUS | BLOCK: 087
1600 SW 4TH AVENUE
PORTLAND, OREGON 97201

REGISTERED ARCHITECT
ARI-11654
GERALD R GOTSCHALL
PORTLAND, OREGON
STATE OF OREGON
Exp. 12/31/2026

ISSUED FOR BID & PERMIT

9/4/2026
HALF SIZE WHEN PRINTED AT 11X17

Sheet Title :
DETAILS

Revisions : *
Date : 2026

Drawn : NR
Checked : GRG

Sheet # :
A607

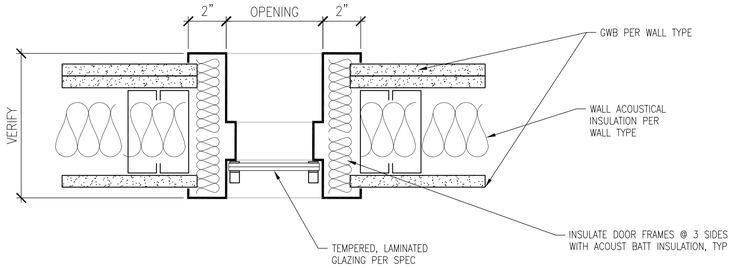

1A DOOR & LITE FRAMES
3" = 1'-0"

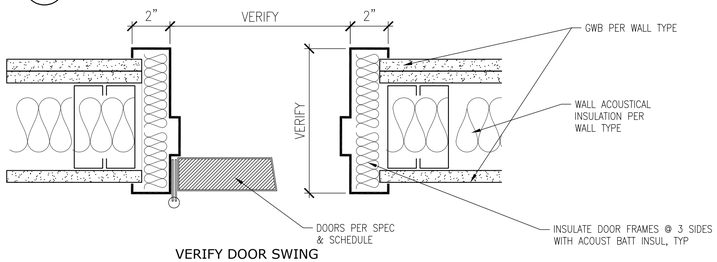

VERIFY DOOR SWING

1 DOOR & LITE FRAMES
3" = 1'-0"

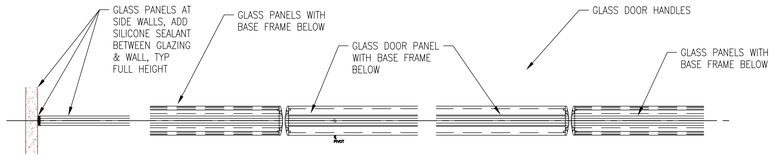

3 DOOR & LITE FRAMES
3" = 1'-0"

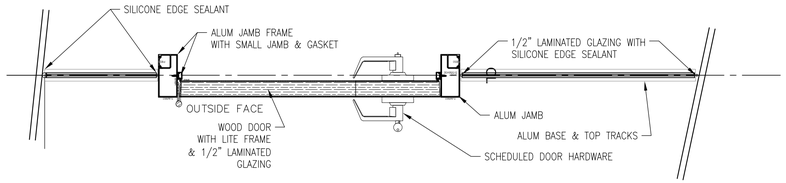

2 DOOR & LITE FRAMES
1 1/2" = 1'-0"

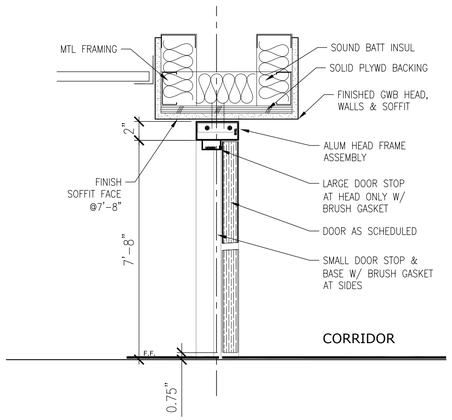

4 FRAME @ Study Room 461
1 1/2" = 1'-0"

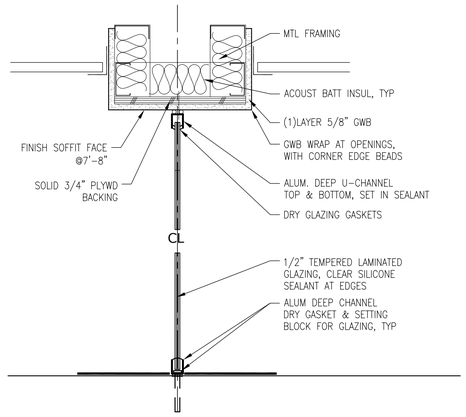

5 LITE @ Study Room 461
1 1/2" = 1'-0"

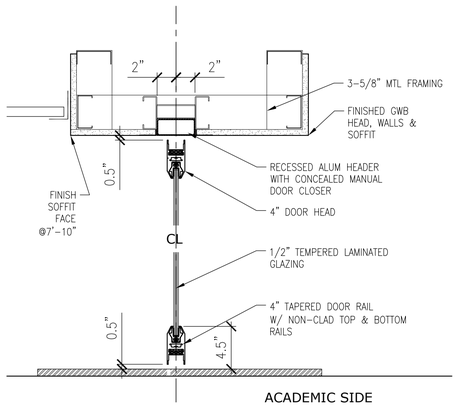

6 DOOR & LITE FRAMES
3" = 1'-0"

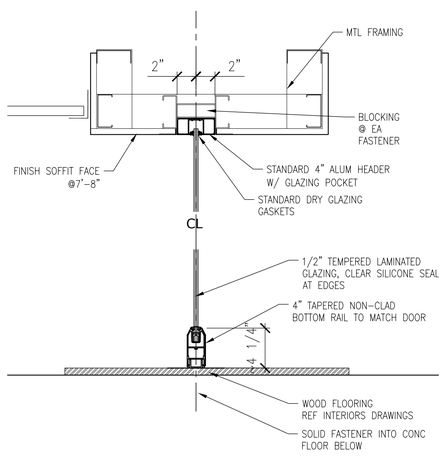

7 DOOR & LITE FRAMES
3" = 1'-0"

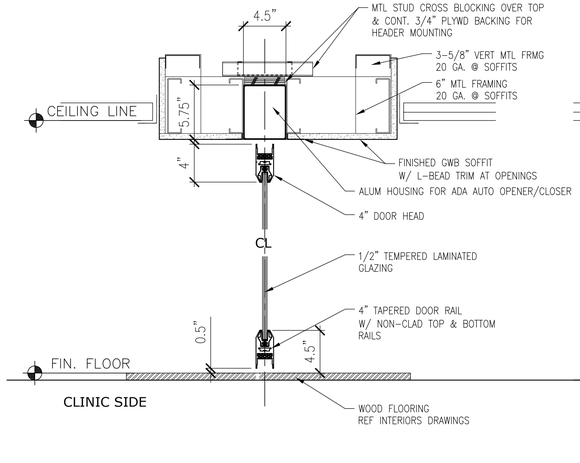

8 DOOR & LITE FRAMES
3" = 1'-0"

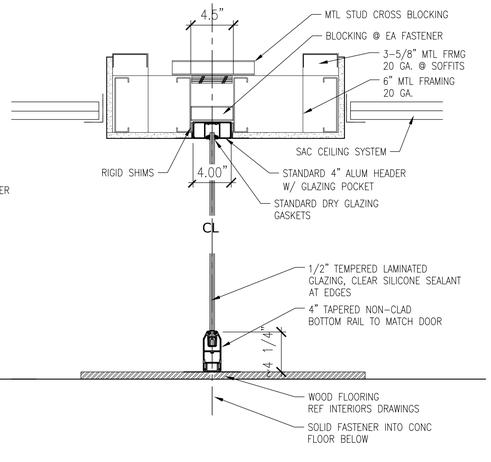

9 DOOR & LITE FRAMES
3" = 1'-0"

Portland State UNIVERSITY

PSU CAPITAL PROJECTS & CONSTRUCTION

RMNC

RICHARD & MAURINE NEUBERGER CENTER

4TH FLOOR SPHR
INTERIOR REMODEL

PSU CAMPUS | BLOCK: 087
1600 SW 4TH AVENUE
PORTLAND, OREGON 97201

REGISTERED ARCHITECT
ARI-11654
GERALD R GOTSCHALL
PORTLAND, OREGON
STATE OF OREGON

Exp. 12/31/2026

ISSUED FOR BID & PERMIT

9/4/2026

HALF SIZE WHEN PRINTED AT 11X17

Sheet Title :
DETAILS

Revisions : *
Date : 2026

Drawn : NR
Checked : GRG

Sheet # :
A608

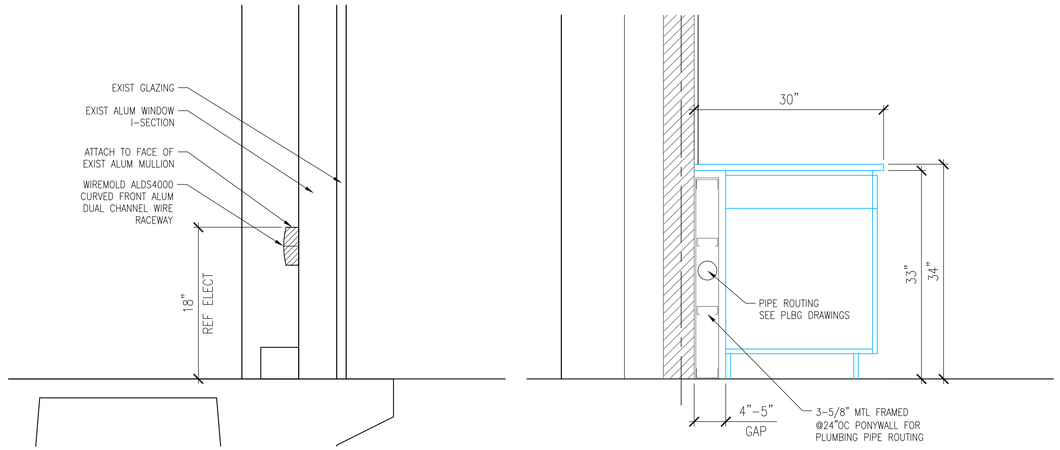

1 ELECTRICAL WIREMOLD @ WINDOWS
1" = 1'-0"

2 FURRED PLBG WALL @ CASEWORK
1" = 1'-0"

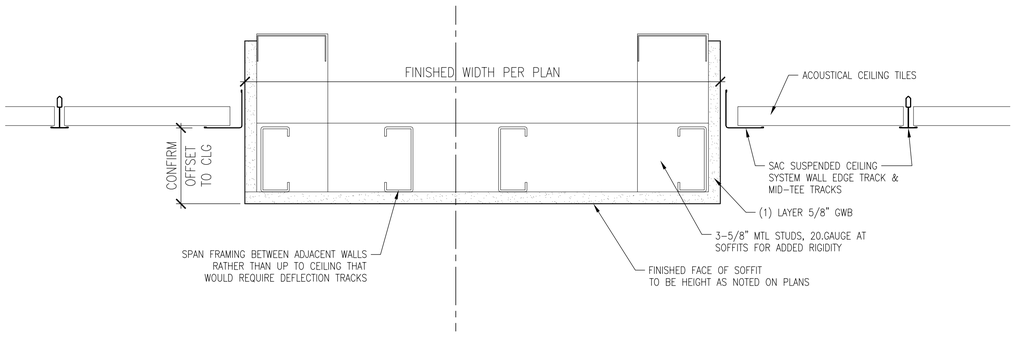

4 GWB & METAL FRAMED SOFFIT
3" = 1'-0"

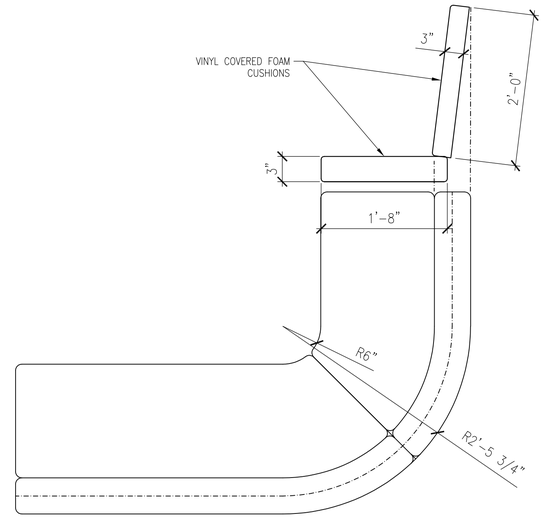

5 BENCH SEAT CUSHIONS
3" = 1'-0"

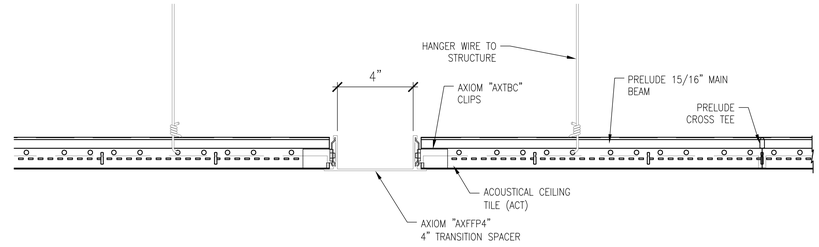

3 SECTION - CEILING TRANSITION - SAC SPACER
3" = 1'-0"

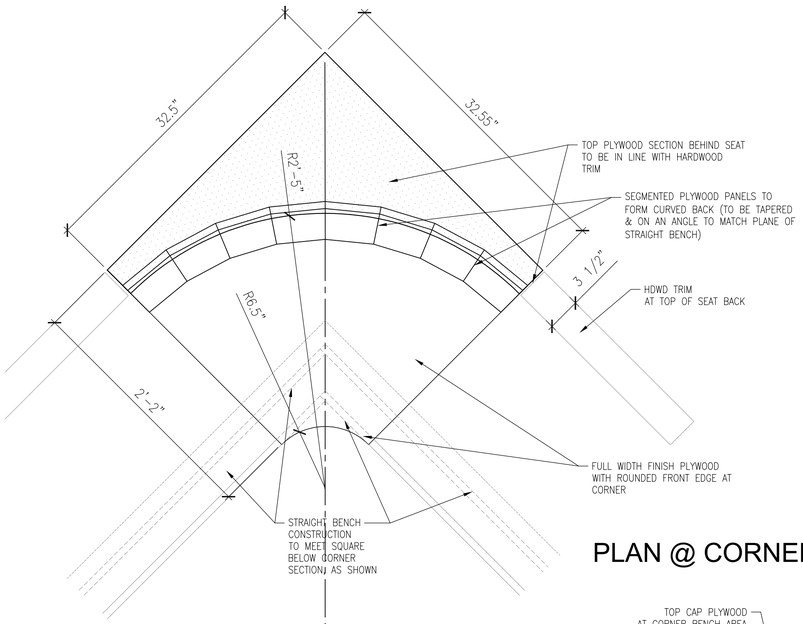

PLAN @ CORNER

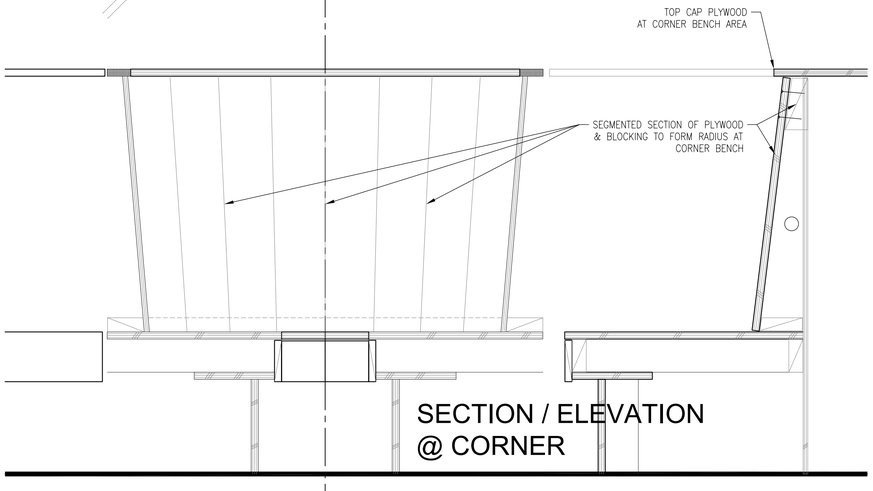

SECTION / ELEVATION @ CORNER

6 DOOR & LITE FRAMES
3" = 1'-0"

Portland State UNIVERSITY
PSU CAPITAL PROJECTS & CONSTRUCTION

RMNC
RICHARD & MAURINE NEUBERGER CENTER

4TH FLOOR SPHR
INTERIOR REMODEL

PSU CAMPUS | BLOCK: 087
1600 SW 4TH AVENUE
PORTLAND, OREGON 97201

REGISTERED ARCHITECT
ARI-11654
GERALD R GOTSCHALL
PORTLAND, OREGON
STATE OF OREGON
Exp. 12/31/2026

ISSUED FOR BID & PERMIT

9/4/2026
HALF SIZE WHEN PRINTED AT 11X17

Sheet Title :
DETAILS

Revisions : *
Date : 2026

Drawn : NR
Checked : GRG

Sheet # :
A609

DOOR SCHEDULE

SPHR — UPDATE: 9/30/2026 GRG

Door Number	Room Name	Door: Door Type	New / Exist / Demo / Salvage	Style (1)	Width	Height	Thickness	Material	Finish	Rating Label	Door Lite: Lite Size	New / Exist / Demo	Lite Glazing	Frame: Material	New / Exist	Finish	Rating Label	Key note	Sidelite: Sidelite Glazing	Sidelite Size	HDWR: HDWR Group (E - EXISING)	HDWR NOTE	NOTES
FOURTH FLOOR - NEW DOORS & LITES																							
V401	Stair Vest		EXIST							90 min					EXIST	Repaint		4			E		
S401	STAIR - NORTH		EXIST							90 min					EXIST						E		Security: Existing Card reader. Exit only from 4th floor, locked from stairwell into 4th floor for security control.
V402	Stair Vest		EXIST							90 min					EXIST	Repaint		4			E		
S402	STAIR - SOUTH		EXIST							90 min					EXIST						E		Security: Existing Card reader. Exit only from 4th floor, locked from stairwell into 4th floor for security control.
V403	Vest. To Mens RR		(NO DOOR)							90 min											E		
403	Mens RR		EXIST												EXIST	Repaint		5			E		
403A	Jan. Sink Room		EXIST												EXIST	Repaint		5			E		
V404	Vest. to Womens RR		(NO DOOR)																		E		
404	Womens RR		EXIST												EXIST	Repaint		5			E		
404A	Electrical		EXIST					MTL							EXIST	Repaint		4			E		
405	Exist Single User RR		EXIST					WOOD							EXIST						HW-9		REPLACE DOOR LEVERS, SEE HARDWARE SCHEDULE.
406	Telecom/Tech		EXIST					WOOD							EXIST						E		
	END OF EXISTING DOORS + LITES																						
L400-1	Elevator Lobby (EAST to Clinic)	Glass, Lobby	NEW	SINGLE	40"																HW-11		Door to have Card Reader Access installed.
L400-2	Elevator Lobby (WEST to Academic)	Glass, Lobby	NEW	SINGLE	40"																HW-12		Door to have Card Reader Access installed.
409-1	Group Room, Universal		NEW		36"	84"	1-3/4"	WOOD	CLEAR					METAL	NEW	PAINT					HW-2		
410-1	Clinic (J)		NEW		36"	84"		WOOD	CLEAR		-			METAL	NEW	PAINT					HW-1		
411-1	Small Viewing 1		NEW		36"	84"		WOOD	CLEAR		-			METAL	NEW	PAINT					HW-1		
412-1	Small Viewing 2		NEW		36"	84"		WOOD	CLEAR		-			METAL	NEW	PAINT					HW-1		
413-1	Small Viewing 3		NEW		36"	84"		WOOD	CLEAR		-			METAL	NEW	PAINT					HW-1		
414-1	Small Viewing 4		NEW		36"	84"		WOOD	CLEAR		-			METAL	NEW	PAINT					HW-1		
415	Sink Alcove, Corridor		(NO DOOR)					-	-					-	-	-							
416-1	Clinic (H)		NEW	F	36"	84"		WOOD	CLEAR					METAL	NEW	PAINT					HW-1		
417-1	Clinic (G)		NEW	F	36"	84"		WOOD	CLEAR					METAL	NEW	PAINT					HW-1		
418-1	Clinic (F)		NEW	F	36"	84"		WOOD	CLEAR					METAL	NEW	PAINT					HW-1		
419-1	Clinic (E)		NEW	F	36"	84"		WOOD	CLEAR					METAL	NEW	PAINT					HW-1		
420-1	Clinic (D)		NEW	F	36"	84"		WOOD	CLEAR					METAL	NEW	PAINT					HW-1		
421-1	Clinic (C)		NEW	F	36"	84"		WOOD	CLEAR					METAL	NEW	PAINT					HW-1		
422-1	Clinic (B)		NEW	F	36"	84"		WOOD	CLEAR					METAL	NEW	PAINT					HW-1		
423-1	Clinic (A)		NEW	F	36"	84"		WOOD	CLEAR					METAL	NEW	PAINT					HW-1		
424-1	Clinic (K) Audiology		NEW	F	36"	84"		WOOD	CLEAR					METAL	NEW	PAINT					HW-7		
425	Clinic Supply		(NO DOOR)					-	-														
426-1	Clinic Admin Office		NEW	F	36"	84"		WOOD	CLEAR					METAL	NEW	PAINT					HW-3		
427-1	Clinic Reception to Clinic Rooms	3-LITES	**NEW**	**LT-3**	**40"**	**84"**		**METAL**	**PAINT**		*See note.*			METAL	NEW	PAINT					HW-10	8	See DOOR ELEVATION DRAWING for LT-3 LITE sizes.
428	Clinic Lobby		(NO DOOR)																				
430-1	Research Lab 1		NEW	F	36"	84"		WOOD	CLEAR					METAL	NEW	PAINT					HW-7		
430A	Lab - Eye Tracker Room		NEW	F	36"	84"		WOOD	CLEAR					METAL	NEW	PAINT					HW-7		
430B	Lab - Testing Room		NEW	F	36"	84"		WOOD	CLEAR		-			METAL	NEW	PAINT					HW-7		
431-1	Adjunct Offices		NEW	LTS	36"	84"		WOOD	CLEAR		6 x 36			METAL	NEW	PAINT					HW-3		
431A	Video Room																				HW-6		
432-1	Research Lab 2		NEW	F	36"	84"		WOOD	CLEAR		-			METAL	NEW	PAINT					HW-7		
433-1	Staff Breakroom		NEW	LTS	36"	84"		WOOD	CLEAR		6 x 36			METAL	NEW	PAINT					HW-6		
434-1	Office 1		NEW	LTS	36"	84"		WOOD	CLEAR		6 x 36			METAL	NEW	PAINT					HW-3		
435-1	Office 2		NEW	LTS	36"	84"		WOOD	CLEAR		6 x 36			METAL	NEW	PAINT					HW-3		
436-1	Office 3 - Clinic Director		NEW	LTS	36"	84"		WOOD	CLEAR		6 x 36			METAL	NEW	PAINT					HW-3		
437-1	Office 4		NEW	LTS	36"	84"		WOOD	CLEAR		6 x 36			METAL	NEW	PAINT					HW-3		
438-1	Small Conf Room		NEW	LTF	36"	84"		WOOD	CLEAR		24 x 60			METAL	NEW	PAINT					HW-6		
439-1	Office 5		NEW	LTS	36"	84"		WOOD	CLEAR		6 x 30			METAL	NEW	PAINT					HW-3		
440-1	Research Lab 3		NEW	F	36"	84"		WOOD	CLEAR		-			METAL	NEW	PAINT					HW-7		
441-1	Office 6		NEW	LTS	36"	84"		WOOD	CLEAR		6 x 36			METAL	NEW	PAINT					HW-3		
442-1	Research Lab 4		NEW	F	36"	84"		WOOD	CLEAR					METAL	NEW	PAINT					HW-7		
443-1	Office 7		NEW	LTS	36"	84"		WOOD	CLEAR		6 x 36			METAL	NEW	PAINT					HW-3		
444-1	Research Lab 5		NEW	F	36"	84"		WOOD	CLEAR					METAL	NEW	PAINT					HW-7		
445-1	Office 8		NEW	LTS	36"	84"		WOOD	CLEAR		6 x 36			METAL	NEW	PAINT					HW-3		
446-1	Research Lab 6		NEW	F	36"	84"		WOOD	CLEAR					METAL	NEW	PAINT					HW-7		
447-1	Office 9		NEW	LTS	36"	84"		WOOD	CLEAR		6 x 36			METAL	NEW	PAINT					HW-3		
448-1	Office 10		NEW	LTS	36"	84"		WOOD	CLEAR		6 x 36			METAL	NEW	PAINT					HW-3		
449-1	Office 11 - Dir. Office		NEW	LTS	36"	84"		WOOD	CLEAR		6 x 36			METAL	NEW	PAINT					HW-3		
450-1	Office 12		NEW	LTS	36"	84"		WOOD	CLEAR		6 x 36			METAL	NEW	PAINT					HW-3		
451-1	Office 13		NEW	LTS	36"	84"		WOOD	CLEAR		6 x 36			METAL	NEW	PAINT					HW-3		
452-1	Office 14		NEW	LTS	36"	84"		WOOD	CLEAR		6 x 36			METAL	NEW	PAINT					HW-3		
453-1	Office 15		NEW	LTS	36"	84"		WOOD	CLEAR		6 x 36			METAL	NEW	PAINT					HW-3		
454-1	Office 16		NEW	LTS	36"	84"		WOOD	CLEAR		6 x 36			METAL	NEW	PAINT					HW-3		
455a	Video Room		NEW	LTS	36"	84"		WOOD	CLEAR		6 x 36			METAL	NEW	PAINT					HW-5		
455b	Video Room		NEW	LTS	36"	84"		WOOD	CLEAR		6 x 36			METAL	NEW	PAINT					HW-5		
456-1	Research Lab 7 (w Soundbooth)		NEW	F	36"	84"		WOOD	CLEAR					METAL	NEW	PAINT					HW-7		
457-1	RR Single, New 1		NEW	F	36"	84"		WOOD	CLEAR					METAL	NEW	PAINT					HW-8		3/4" under cut @ threshold for ventilation
458-1	RR Single, New 2		NEW	F	36"	84"		WOOD	CLEAR					METAL	NEW	PAINT					HW-8		3/4" under cut @ threshold for ventilation
460	Student Work/Study (Open Area)		(NO DOOR)	-				WOOD	CLEAR					METAL	NEW	PAINT							
461-1	Meeting/Study		NEW	LTF	36"	84"		WOOD	CLEAR		24x60			METAL	NEW	PAINT			TEM-LAM	FULL HT	HW-5		
462	Locker Alcove		(NO DOOR)	-				WOOD	CLEAR					METAL	NEW	PAINT							
463-1	Secure Prep Room		NEW	LTF	36"	84"		WOOD	CLEAR		24 x 60			METAL	NEW	PAINT					HW-4		Verify if CR is required or Key
464	Toy Workroom		(NO DOOR)	-				WOOD	CLEAR					METAL	NEW	PAINT							
465-1	Classroom 1	Door w/Side Lt	NEW	LTS	36"	84"		WOOD	CLEAR		6 x 36			METAL	NEW	PAINT					HW-2		
466-1	Classroom 2	Door w/Side Lt	NEW	LTS	36"	84"		WOOD	CLEAR		6 x 36			METAL	NEW	PAINT					HW-2		
467-1	Student Viewing Room		NEW	LTS	36"	84"		WOOD	CLEAR					METAL	NEW	PAINT					HW-4		
468-1	Storage		NEW	F	36"	84"		WOOD	CLEAR					METAL	NEW	PAINT					HW-4		
C411-1	Corridor (C411 to C424)							WOOD	CLEAR					METAL	NEW	PAINT					HW-10	8	PREP FRAME FOR FUTURE CARD READER
C410-1	Clinic Corr Exit (C410 to C414)							WOOD	CLEAR					METAL	NEW	PAINT					HW-10	8	PREP FRAME FOR FUTURE CARD READER
C415-1	Corr to Recpt. (C415 to Lobby 428)							WOOD	CLEAR					METAL	NEW	PAINT					HW-10	8	PREP FRAME FOR FUTURE CARD READER
	END OF NEW DOORS + LITES																						

Door Styles

F	FULL FLUSH DOOR
LTS	DOOR WITH SMALL VIEW LITE
LTF	DOOR WITH FULL LITE
GLZ	FULL GLASS DOOR
3-LT	3-LITE DOOR

Schedule Key Notes:

1. See Door Elevation Drawings: F-#
2. See Door Hardware Schedule in Specs for Hardware Group specifics.
3. See Glazing Specs for Glazing Types Schedule.
4. Paint outside face of door & frame only
5. Paint door & Frame - both sides
6. Door to have acoustical enhancements - see HDWR Schedule
7. Security: Card reader. Change door hardware to lever with keyway for XM3 key, Exit only from 4th floor, locked from stairwell into 4th floor for security control.
8. Prepare Wall & Door Frame for Card Reader: Conduit, 1-gang boxes, frame / strike. Ref Elect.

Portland State UNIVERSITY

PSU CAPITAL PROJECTS & CONSTRUCTION

RMNC

RICHARD & MAURINE NEUBERGER CENTER

4TH FLOOR SPHR
INTERIOR REMODEL

PSU CAMPUS | BLOCK: 087
1600 SW 4TH AVENUE
PORTLAND, OREGON 97201

REGISTERED ARCHITECT
ARI-11654
GERALD R GOTSCHALL
PORTLAND, OREGON
STATE OF OREGON

Exp. 12/31/2026

ISSUED FOR BID & PERMIT

9/4/2026

HALF SIZE WHEN PRINTED AT 11X17

Sheet Title :

DOOR SCHEDULE

Revisions : *

Date : 2026

Drawn : NR

Checked : GRG

Sheet # :

A901

GRAPHIC SYMBOLS

WALL SECTION

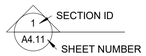

DETAIL REFERENCE

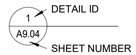

OR

SIM

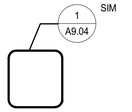

INTERIOR ELEVATION

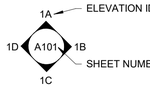

GRID LINES



GRAPHIC SCALE





NORTH ARROW

MATCH LINE

A2.12 LOCATION OF ADJACENT DRAWING

ROOM TAG





FLOOR FINISH INDICATOR

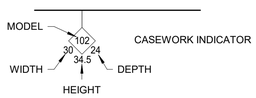

INTERIOR ABBREVIATIONS

AFF	ABOVE FINISH FLOOR
ALUM	ALUMINUM
APPROX	APPROXIMATE
AVG	AVERAGE
BLDG	BUILDING
BOT	BOTTOM
CFCI	CONTRACTOR FURNISHED / CONTRACTOR INSTALLED
CFOI	CONTRACTOR FURNISHED / OWNER INSTALLED
CPTT	CARPET TILE
CG	CORNER GUARD
CJ	CONTROL JOINT
CL	CENTER LINE
COL	COLUMN
CONC	CONCRETE
CT	CERAMIC TILE
CTP	CERAMIC TILE PATTERN
DEPT	DEPARTMENT
DF	DRINKING FOUNTAIN
DIA	DIAMETER
DIM	DIMENSION
DIM PT	DIMENSION POINT
DN	DOWN
DPGL	DECORATIVE PLASTIC GLAZING
DR	DOOR
DW	DISHWASHER
DWG	DRAWING
EA	EACH
ELEV	ELEVATION
ELEC	ELEC
ELEV	ELEVATOR
EQUIP	EQUIPMENT
EXIST	EXISTING
EXT	EXTERIOR
FA	FIRE ALARM
FD	FLOOR DRAIN
FE	FIRE EXTINGUISHER
FEC	FIRE EXTINGUISHER CABINET
FOF	FACE OF FINISH
FOS	FACE OF STUDS
GA	GAUGE
GC	GENERAL CONTRACTOR
GWB	GYPSUM WALL BOARD
GYP	GYPSUM
HDWD	HARDWOOD
HPWC	HIGH PERFORMANCE WALL COVERING
HORIZ	HORIZONTAL
HVP	HARDWOOD VENEER PANEL
ID	INSIDE DIAMETER
IN	INCHES
INT	INTERIOR
IRWC	IMPACT RESISTANT WALL COVERING
JT	JOINT
LF	LINEAR FOOT
MAX	MAXIMUM
MBWP	MARKER BOARD WALL PANEL
MDF	MEDIUM DENSITY FIBERBOARD
MDO	MEDIUM DENSITY OVERLAY
MFR	MANUFACTURER
MISC	MISCELLANEOUS
MET	METAL
NA	NOT APPLICABLE
NIC	NOT IN CONTRACT
NTS	NOT TO SCALE
OC	ON CENTER
OD	OUTSIDE DIAMETER
OFCI	OWNER FURNISHED / CONTRACTOR INSTALLED
OFOI	OWNER FURNISHED / OWNER INSTALLED
OPNG	OPENING
OPP	OPPOSITE
OZ	OUNCE
P	PAINT
PERP	PERPENDICULAR
PL	PLATE
PLAM	PLASTIC LAMINATE
PLYWD	PLYWOOD
PNL	PANEL
PT	PORCELAIN TILE
RB	RESILIENT BASE
RM	ROOM
RO	ROUGH OPENING
RS-M	ROLLER SHADE - MANUAL
RFT	RESILIENT FLOOR TILE
SAW	SOUND ABSORBING WALL PANEL
SCHED	SCHEDULE
SF	SQUARE FEET
SHTG	SHEATHING
SIM	SIMILAR
SPEC	SPECIFICATIONS
SBM	SHADE BAND MATERIAL
SSM	SOLID SURFACE MATERIAL
SST	STAINLESS STEEL
STC	SOUND TRANSMISSION CLASS
STD	STANDARD
SUSP	SUSPENDED
TB	TACKBOARD
TCF	TEXTILE COMPOSITE FLOOR TILE
TYP	TYPICAL
TWC	TACKABLE WALL COVERING
UL	UNDERWRITERS LABORATORIES
UNO	UNLESS NOTED OTHERWISE
VERT	VERTICAL
VOL	VOLUME
W/O	WITHOUT
WD	WOOD
WDF	WOOD FLOOR
WDW	WINDOW

SHEET INDEX

I1.00	DRAWING INDEX & GENERAL NOTES
I1.01	INTERIOR FINISH FLOOR PLAN - NORTH
I1.02	INTERIOR FINISH FLOOR PLAN - SOUTH
I1.11	TOILET TILE EXTENT PLANS AND TILE PATTERN
I1.12	TOILET TILE EXTENT PLANS AND TILE PATTERN
I3.01	INTERIOR ELEVATIONS - CLINIC
I3.02	INTERIOR ELEVATIONS - CLINIC
I3.03	INTERIOR ELEVATIONS - CLINIC
I3.04	INTERIOR ELEVATIONS - CLINIC
I3.05	INTERIOR ELEVATIONS - STUDENT LEARNING
I3.06	INTERIOR ELEVATIONS - STUDENT LEARNING
I3.07	INTERIOR ELEVATIONS - ADMIN
I3.08	INTERIOR ELEVATIONS - ADMIN
I3.09	INTERIOR ELEVATIONS - ADMIN
I3.10	INTERIOR ELEVATIONS - ADMIN
I5.11	INTERIOR DETAILS
I5.12	INTERIOR DETAILS
I5.21	CASEWORK DETAILS
I5.22	CASEWORK DETAILS
I5.23	RECEPTION DESK CASEWORK DETAILS
I5.24	KITCHEN CASEWORK DETAILS
I6.01	ROOM FINISH SCHEDULE
I6.11	FINISH SCHEDULE
I6.12	FINISH SCHEDULE

GENERAL NOTES

1. VERIFY AND COORDINATE SITE CONDITIONS, EXISTING BUILDING CONDITIONS, AND DIMENSIONS. BRING INCONSISTENCIES TO ATTENTION OF ARCHITECT BEFORE PROCEEDING WITH WORK.
2. IMMEDIATELY BRING INCONSISTENCIES, ERRORS AND OMISSIONS FOUND IN THE DRAWINGS AND SPECIFICATIONS TO ATTENTION OF ARCHITECT.
3. DO NOT SCALE DRAWINGS. COORDINATE DIMENSIONS SHOWN ON DRAWINGS WITH ACTUAL FIELD MEASUREMENTS. NOTIFY ARCHITECT OF DISCREPANCIES.
4. ALL DIMENSIONS ARE TO FACE OF STUD, FACE OF CONCRETE AND NOMINAL FACE OF MASONRY, AND CENTERLINE OF COLUMNS, UNLESS NOTED OTHERWISE.
5. WORK INSTALLED IN CONFLICT WITH CONSTRUCTION DOCUMENTS WILL BE CONSIDERED IN NON-CONFORMANCE AND SHALL BE CORRECTED AT NO EXPENSE TO OWNER OR ARCHITECT.
6. COORDINATION: COORDINATE WORK TO COMPLY WITH DRAWINGS AND SPECIFICATIONS, INCLUDING MECHANICAL, ELECTRICAL, EQUIPMENT AND OTHER CONSTRUCTION.
7. FOLLOW MANUFACTURER'S INSTRUCTIONS, EXCEPT WHERE MORE STRINGENT REQUIREMENTS ARE INDICATED OR REQUIRED BY CONSTRUCTION DOCUMENTS OR APPLICABLE CODES, ORDINANCES AND REGULATIONS.
8. PROVIDE INTERMEDIATE ROD AND SHELF SUPPORTS FOR SPANS EXCEEDING 36".
9. ISOLATE AND OFFSET OUTLETS ONE STUD SPACE MINIMUM AT SOUND RATED WALLS TO PREVENT SOUND TRANSMISSION.
10. COORDINATE EXACT LOCATION OF CONDUIT, PLUMBING AND PIPING WITH ELECTRICAL AND MECHANICAL SUBCONTRACTORS.
11. FINISHES: IN FINISHED INTERIOR AREAS: NO EXPOSED PIPE, CONDUITS, DUCTS, VENTS, ETC. UNLESS NOTED OTHERWISE, CONCEAL UTILITY LINES BEHIND FINISHED CONSTRUCTION UNLESS NOTED AS EXPOSED CONSTRUCTION ON DRAWINGS OR APPROVED BY ARCHITECT. IF AFOREMENTIONED WORK CANNOT BE CONCEALED WITHIN FINISHED CONSTRUCTION OF THE CONTRACT DOCUMENTS THE CONTRACTOR SHALL PROVIDE & INSTALL FURRED & FINISHED HORIZONTAL & VERTICAL CHASES TO MATCH ADJACENT FINISH TO CONCEAL WORK, COORDINATE WITH ARCHITECT.
12. TERMINATE INTERIOR WALL FINISHES AND PAINT ON AN INSIDE CORNER, UNLESS NOTED OTHERWISE.
13. PROVIDE GALVANIC ISOLATION BETWEEN DISSIMILAR METALS.
14. CORNER GUARDS ARE SHOWN ON FINISH PLANS, I1.01 and I1.02

Portland State UNIVERSITY

PSU CAPITAL PROJECTS & CONSTRUCTION

RMNC
RICHARD & MAURINE NEUBERGER CENTER

4TH FLOOR SPHR
INTERIOR REMODEL

PSU CAMPUS | BLOCK: 087
1600 SW 4TH AVENUE
PORTLAND, OREGON 97201

bassetti architects DESIGN FOR GOOD
A Design Studio of HMC Architects

This document has been digitally signed

REGISTERED ARCHITECT JOSEPH ECHEVERRI 6430 PORTLAND, OREGON STATE OF OREGON

09/17/2026 8:50:11 AM

ISSUED FOR BID & PERMIT

9/18/2026

*HALF SIZE WHEN PRINTED AT

Sheet Title : DRAWING INDEX & GENERAL NOTES

Revisions : *

Date : 9/18/2026

Drawn : BASSETTI

Checked : -

Sheet # : I1.00

9/15/2026 3:42:30 PM

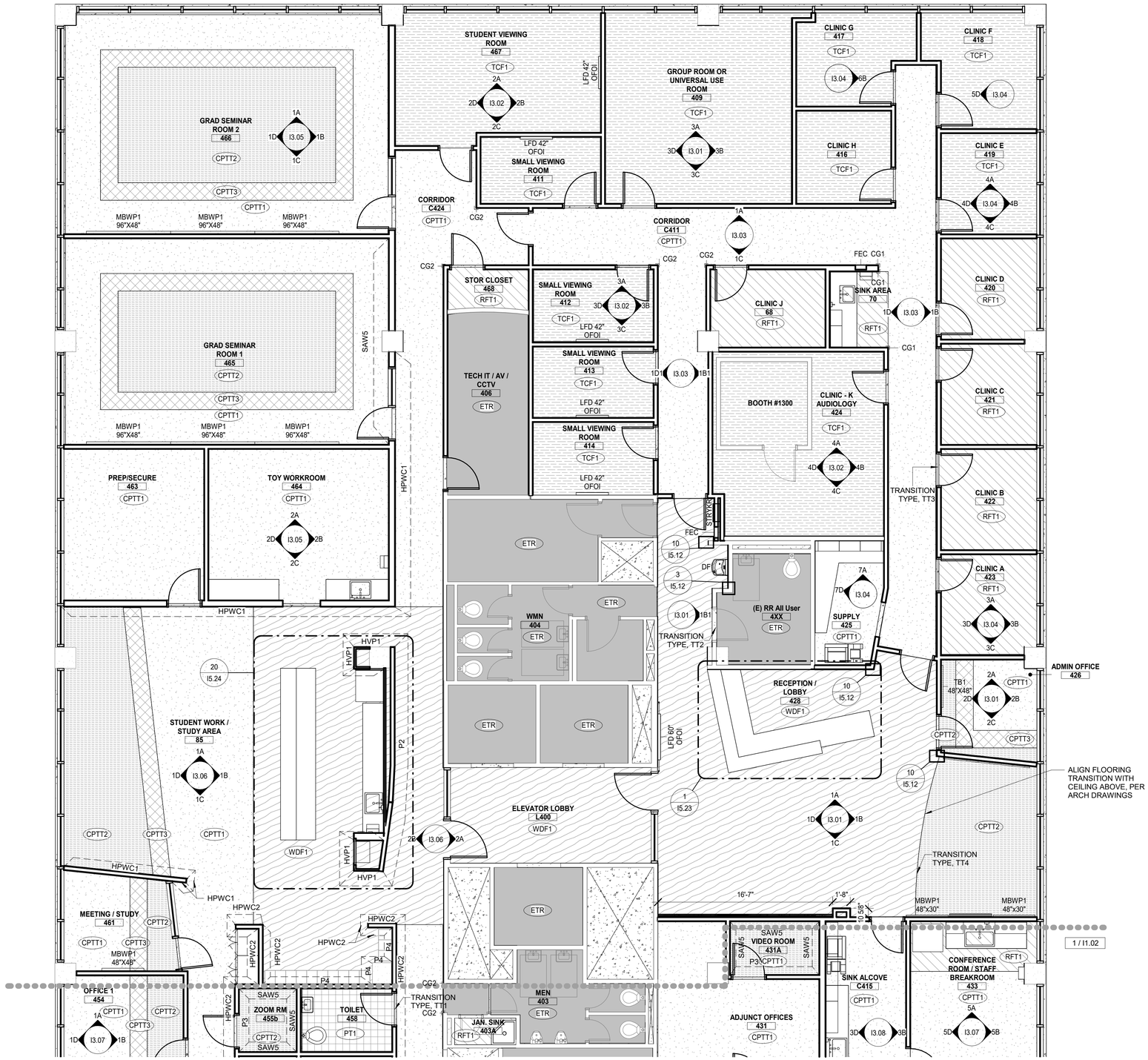

1 FINISH FLOOR PLAN - NORTH
3/16" = 1'-0"

9/15/2026 3:42:32 PM

FLOOR FINISH LEGEND

- 096813 CARPET TILE, FIELD (CPTT1)
- 096813 CARPET TILE, ACCENT COLOR (CPTT2)
- 096813 CARPET TILE, ACCENT TRANSITION (CPTT3)
- 096813 TEXTILE COMPOSITE FLOOR TILE (TCF1)
- 096500 RESILIENT FLOOR TILE (RFT1)
- 093000 PORCELAIN TILE (PT1)
- 096400 WOOD FLOOR (WDF1)
- EXISTING FLOORING TO REMAIN (ETR)

INTERIOR FINISH GENERAL NOTES

1. REFER TO REFLECTED CEILING PLANS FOR CEILING MATERIALS AND ADDITIONAL FINISH NOTES.
2. REFER TO I SERIES FOR FINISH SCHEDULES AND EXTENTS OF PAINT.
3. AN (*) SHOWN IN THE FINISH SCHEDULE MEANS TO REFER TO THE REMARKS COLUMN.
4. REFER TO I3 SERIES FOR INTERIOR ELEVATION GENERAL NOTES.
5. REFER TO I5.11 FOR TYPICAL FLOOR TRANSITION DETAILS.
6. GENERAL PAINTING NOTES AS FOLLOWS UNLESS OTHERWISE NOTED:
   1. EXPOSED STRUCTURAL STEEL: P-5
   2. INTERIOR HOLLOW METAL DOORS AND BORROWED LIGHTS: P-5
   3. ACCESS DOORS TO MATCH ADJACENT SURFACE COLOR.
   4. END ACCENT PAINTS ON INSIDE CORNERS, TYPICAL.
7. TERMINATE INTERIOR FINISHES ON INSIDE CORNERS, TYPICAL.
8. REFER TO INTERIOR ROOM FINISH SCHEDULE FOR ROLLER SHADE LOCATIONS. NOTE: ALL INTERIOR RELITES AND WINDOWS WILL ALSO RECEIVE A ROLLER SHADE.
9. ALL INTERIOR SIGNAGE WILL BE DONE BY OWNER.
10. REFER TO ARCH DRAWINGS FOR DOOR TYPES AND WALL ASSEMBLIES.
11. GRAPHIC CLARIFICATIONS:

P-# CLARIFIES EXTENT OF ACCENT COLORS/FINISHES AT NON RECTANGULAR SPACE LOCATIONS.

Portland State UNIVERSITY

PSU CAPITAL PROJECTS & CONSTRUCTION

RMNC
RICHARD & MAURINE NEUBERGER CENTER

4TH FLOOR SPHR
INTERIOR REMODEL

PSU CAMPUS | BLOCK: 087
1600 SW 4TH AVENUE
PORTLAND, OREGON 97201

bassetti architects DESIGN FOR GOOD
A Design Studio of HMC Architects

This document has been digitally signed

REGISTERED ARCHITECT JOSEPH ECHEVERRI 6430 PORTLAND, OREGON STATE OF OREGON

09/17/2026 8:50:45 AM

ISSUED FOR BID & PERMIT

9/18/2026

*HALF SIZE WHEN PRINTED AT

Sheet Title : INTERIOR FINISH FLOOR PLAN - NORTH

Revisions :	Date :
*	9/18/2026

Drawn : BASSETTI Checked : -

Sheet # : I1.01

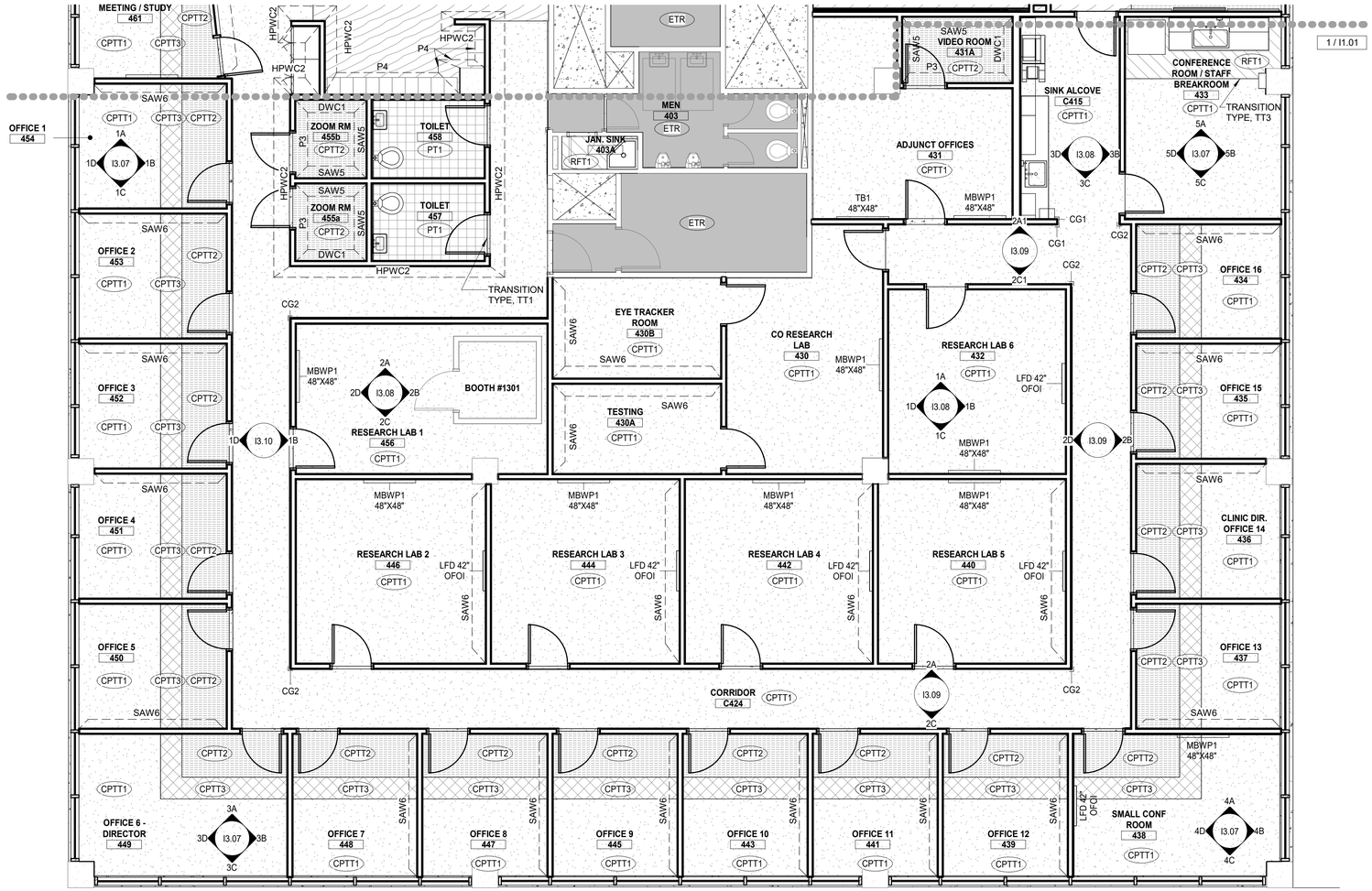

1 FINISH FLOOR PLAN - SOUTH

3/16" = 1'-0"

9/15/2026 3:42:34 PM

FLOOR FINISH LEGEND

- 096813 CARPET TILE, FIELD (CPTT1)
- 096813 CARPET TILE, ACCENT COLOR (CPTT2)
- 096813 CARPET TILE, ACCENT TRANSITION (CPTT3)
- 096813 TEXTILE COMPOSITE FLOOR TILE (TCF1)
- 096500 RESILIENT FLOOR TILE (RFT1)
- 093000 PORCELAIN TILE (PT1)
- 096400 WOOD FLOOR (WDF1)
- EXISTING FLOORING TO REMAIN (ETR)

INTERIOR FINISH GENERAL NOTES

1. REFER TO REFLECTED CEILING PLANS FOR CEILING MATERIALS AND ADDITIONAL FINISH NOTES.
2. REFER TO I SERIES FOR FINISH SCHEDULES AND EXTENTS OF PAINT.
3. AN (*) SHOWN IN THE FINISH SCHEDULE MEANS TO REFER TO THE REMARKS COLUMN.
4. REFER TO I3 SERIES FOR INTERIOR ELEVATION GENERAL NOTES.
5. REFER TO I5.11 FOR TYPICAL FLOOR TRANSITION DETAILS.
6. GENERAL PAINTING NOTES AS FOLLOWS UNLESS OTHERWISE NOTED:
   1. EXPOSED STRUCTURAL STEEL: P-5
   2. INTERIOR HOLLOW METAL DOORS AND BORROWED LIGHTS: P-5
   3. ACCESS DOORS TO MATCH ADJACENT SURFACE COLOR.
   4. END ACCENT PAINTS ON INSIDE CORNERS, TYPICAL.
7. TERMINATE INTERIOR FINISHES ON INSIDE CORNERS, TYPICAL.
8. REFER TO INTERIOR ROOM FINISH SCHEDULE FOR ROLLER SHADE LOCATIONS. NOTE: ALL INTERIOR RELITES AND WINDOWS WILL ALSO RECEIVE A ROLLER SHADE.
9. ALL INTERIOR SIGNAGE WILL BE DONE BY OWNER.
10. REFER TO ARCH DRAWINGS FOR DOOR TYPES AND WALL ASSEMBLIES.
11. GRAPHIC CLARIFICATIONS:

P-# CLARIFIES EXTENT OF ACCENT COLORS/FINISHES AT NON RECTANGULAR SPACE LOCATIONS.

Portland State UNIVERSITY

PSU CAPITAL PROJECTS & CONSTRUCTION

RMNC
RICHARD & MAURINE NEUBERGER CENTER

4TH FLOOR SPHR
INTERIOR REMODEL

PSU CAMPUS | BLOCK: 087
1600 SW 4TH AVENUE
PORTLAND, OREGON 97201

bassetti architects DESIGN FOR GOOD
A Design Studio of HMC Architects

This document has been digitally signed
REGISTERED ARCHITECT JOSEPH ECHEVERRI 6439 STATE OF OREGON PORTLAND, OREGON
09/17/2026 8:50:45 AM

ISSUED FOR BID & PERMIT

9/18/2026

*HALF SIZE WHEN PRINTED AT

Sheet Title : INTERIOR FINISH FLOOR PLAN - SOUTH

Revisions :	Date :
*	9/18/2026

Drawn : BASSETTI Checked : -

Sheet # : I1.02

TOILET CERAMIC TILE PATTERN (CTP)

1/2" = 1'-0"

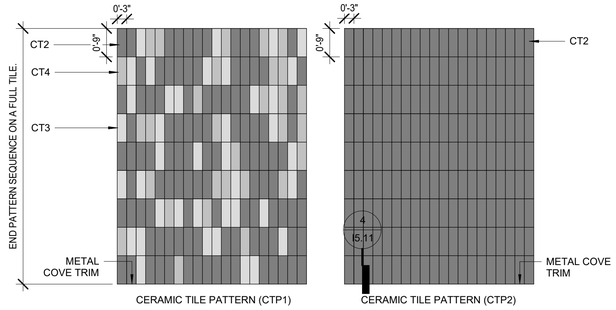

CERAMIC TILE PATTERN LEGEND

TILE PATTERN ELEVATION LEGEND

CT1
BOD: FIRECLAY- 3X9, SALT CREEK, GLOSS

CT2
BOD: FIRECLAY- 3X9, MANZANITA, GLOSS

CT3
BOD: FIRECLAY- 3X9, PUGET SOUND, GLOSS

CT4
BOD: FIRECLAY- 3X9, PEARL, GLOSS

TILE GENERAL NOTES:

1. TILE TO EXTEND AS CLOSE TO TOP EDGE OF DOOR FRAME UNLESS NOTED OTHERWISE, TYP. DO NOT EXTEND TILE OVER DOOR FRAME DATUM.
2. REFER TO CERAMIC TILE PATTERN INFORMATION ON SHEET I1.11.
3. REFER TO SHEET I1.11 AND ROOM FINISH SCHEDULES ON SHEET I6.01 FOR TILE LOCATIONS AND EXTENTS.
4. END TILE EXTENTS ON A FULL TILE, TYP.

TILE EXTENTS PLAN LEGEND

CERAMIC WALL TILE PATTERN 1 (CTP1) WITH METAL COVE TRIM

CERAMIC WALL TILE PATTERN 2 (CTP2) WITH METAL COVE TRIM

DEMOLISH EXISTING CERAMIC WALL TILE AND INSTALL CERAMIC TILE PATTERN 1 (CTP1) IN EXISTING RESTROOM(S), FLOOR TILE TO REMAIN IN PLACE.

DEMOLISH EXISTING CERAMIC WALL TILE AND INSTALL CERAMIC TILE PATTERN 2 (CTP2) IN EXISTING RESTROOMS, FLOOR TILE TO REMAIN IN PLACE.

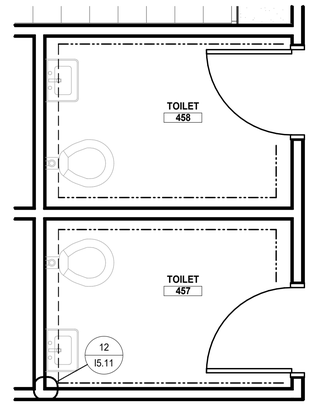

2 457 & 458 TOILETS - TILE EXTENTS PLAN

3/8" = 1'-0"

9/15/2026 3:42:34 PM

Portland State UNIVERSITY

PSU CAPITAL PROJECTS & CONSTRUCTION

RMNC

RICHARD & MAURINE NEUBERGER CENTER

4TH FLOOR SPHR
INTERIOR REMODEL

PSU CAMPUS | BLOCK: 087
1600 SW 4TH AVENUE
PORTLAND, OREGON 97201

bassetti architects DESIGN FOR GOOD
A Design Studio of HMC Architects

This document has been digitally signed

REGISTERED ARCHITECT JOSEPH ECHEVERRI 6430 PORTLAND, OREGON STATE OF OREGON

09/17/2026 8:50:45 AM

ISSUED FOR BID & PERMIT

9/18/2026

*HALF SIZE WHEN PRINTED AT

Sheet Title : TOILET TILE EXTENT PLANS AND TILE PATTERN

Revisions : *

Date : 9/18/2026

Drawn : BASSETTI

Checked : -

Sheet # :

I1.11

CERAMIC TILE PATTERN (CTP)

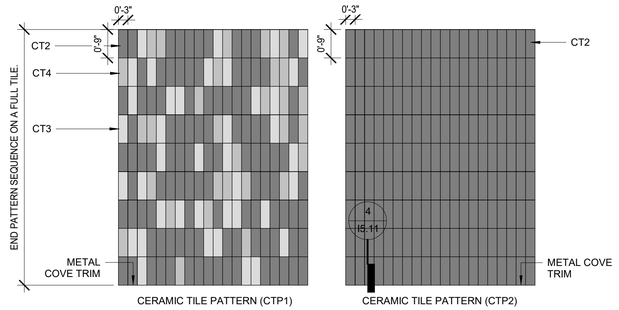

CERAMIC TILE PATTERN LEGEND

TILE PATTERN ELEVATION LEGEND

CT1
BOD: FIRECLAY- 3X9, SALT CREEK, GLOSS

CT2
BOD: FIRECLAY- 3X9, MANZANITA, GLOSS

CT3
BOD: FIRECLAY- 3X9, PUGET SOUND, GLOSS

CT4
BOD: FIRECLAY- 3X9, PEARL, GLOSS

TILE GENERAL NOTES:

1. TILE TO EXTEND AS CLOSE TO TOP EDGE OF DOOR FRAME UNLESS NOTED OTHERWISE, TYP. DO NOT EXTEND TILE OVER DOOR FRAME DATUM.
2. REFER TO CERAMIC TILE PATTERN INFORMATION ON SHEET I1.11.
3. REFER TO SHEET I1.11 AND ROOM FINISH SCHEDULES ON SHEET I6.01 FOR TILE LOCATIONS AND EXTENTS.
4. END TILE EXTENTS ON A FULL TILE, TYP.

TILE EXTENTS PLAN LEGEND

CERAMIC WALL TILE PATTERN 1 (CTP1) WITH METAL COVE TRIM

CERAMIC WALL TILE PATTERN 2 (CTP2) WITH METAL COVE TRIM

DEMOLISH EXISTING CERAMIC WALL TILE AND INSTALL CERAMIC TILE PATTERN 1 (CTP1) IN EXISTING RESTROOM(S), FLOOR TILE TO REMAIN IN PLACE.

DEMOLISH EXISTING CERAMIC WALL TILE AND INSTALL CERAMIC TILE PATTERN 2 (CTP2) IN EXISTING RESTROOMS, FLOOR TILE TO REMAIN IN PLACE.

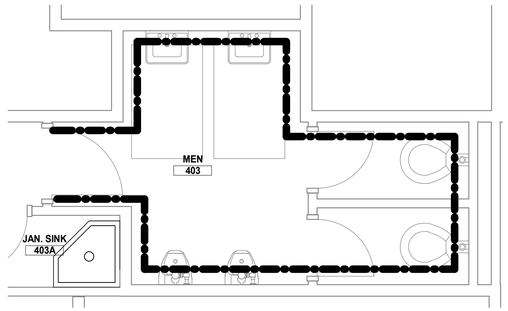

4 (E) 403 MEN - TILE EXTENTS PLAN

3/8" = 1'-0"

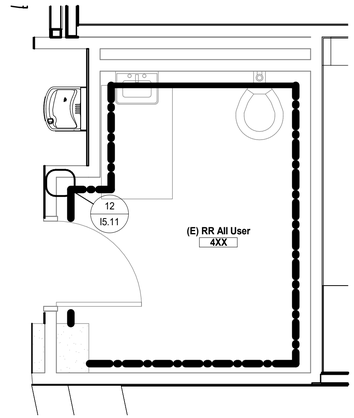

2 (E) RR ALL USER - TILE EXTENTS PLAN

3/8" = 1'-0"

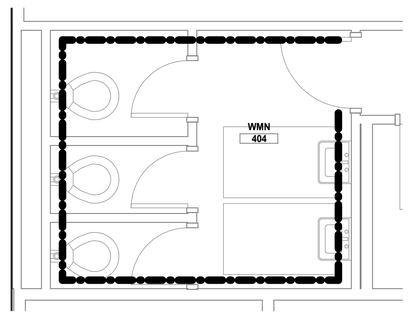

3 (E) 404 WMN - TILE EXTENTS PLAN

3/8" = 1'-0"

9/15/2026 3:42:34 PM

Portland State UNIVERSITY

PSU CAPITAL PROJECTS & CONSTRUCTION

RMNC
RICHARD & MAURINE NEUBERGER CENTER

4TH FLOOR SPHR
INTERIOR REMODEL

PSU CAMPUS | BLOCK: 087
1600 SW 4TH AVENUE
PORTLAND, OREGON 97201

bassetti architects DESIGN FOR GOOD
A Design Studio of HMC Architects

This document has been digitally signed

REGISTERED ARCHITECT JOSEPH ECHEVERRI 6430 PORTLAND, OREGON STATE OF OREGON

09/17/2026 8:50:45 AM

ISSUED FOR BID & PERMIT

9/18/2026

*HALF SIZE WHEN PRINTED AT

Sheet Title : TOILET TILE EXTENT PLANS AND TILE PATTERN

Revisions : *

Date : 9/18/2026

Drawn : BASSETTI

Checked : -

Sheet # : I1.12

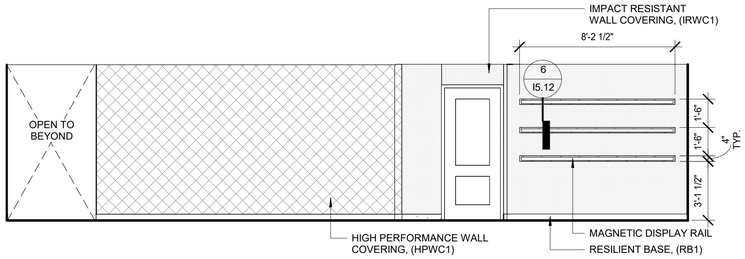

1A 428 RECEPTION / LOBBY - NORTH
1/4" = 1'-0"

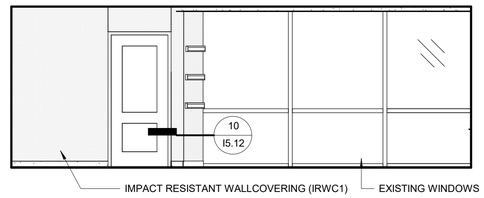

1B 428 RECEPTION / LOBBY - EAST
1/4" = 1'-0"

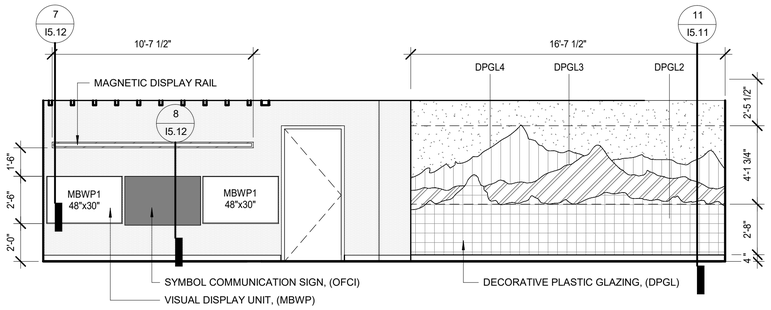

1C 428 RECEPTION / LOBBY - SOUTH
1/4" = 1'-0"

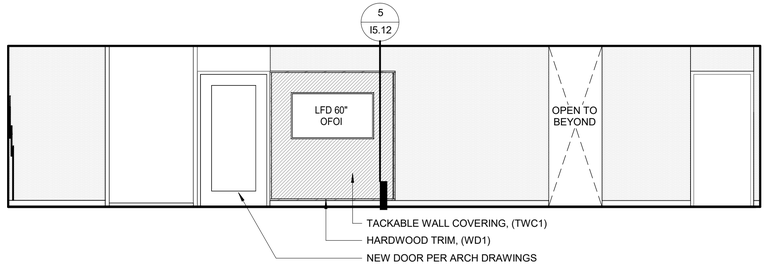

1D 428 RECEPTION / LOBBY - WEST
1/4" = 1'-0"

INTERIOR FINISH LEGEND

SURFACE

- 098433 SOUND ABSORBING WALL PANEL (SAW1)
- 098433 SOUND ABSORBING WALL PANEL (SAW2)
- 098433 SOUND ABSORBING WALL PANEL (SAW3)
- 098433 SOUND ABSORBING WALL PANEL (SAW4)
- 098433SOUND ABSORBING WALL PANEL (SAW5)
- 098433 SOUND ABSORBING WALL PANEL (SAW6)
- 064216 HARDWOOD VENEER PANEL (HVP1)
- 064023 INTERIOR TRIM (WD1)
- 097200 TACKABLE WALL COVERING (TWC1)
- 088413 DECORATIVE PLASTIC GLAZING (DPGL1)
- 088413 DECORATIVE PLASTIC GLAZING (DPGL2)
- 088413 DECORATIVE PLASTIC GLAZING (DPGL3)
- 088413 DECORATIVE PLASTIC GLAZING (DPGL4)
- 088413 DECORATIVE PLASTIC GLAZING (DPGL5)
- 102600 IMPACT RESISTANT WALLCOVERING (IRWC1)
- 097200 HIGH PERFORMANCE WALL COVERING (HPWC1)
- 097200 HIGH PERFORMANCE WALL COVERING (HPWC2)
- 097200 HIGH PERFORMANCE WALL COVERING (HPWC3)
- 093000 CERAMIC TILE (CT#) TILE COLOR AND SIZE VARIES, REFER TO SHEET I1.11 AND FINISH SCHEDULE
- PAINTED GYPSUM BOARD, REFER TO ARCHITECTURE DRAWINGS FOR WALL TYPES

INTERIOR ELEVATION GENERAL NOTES

1. REFER TO ARCHITECTURE DRAWINGS FOR STANDARD MOUNTING HEIGHTS.
2. REFER TO I6 SERIES FOR FINISH SCHEDULES.
3. REFER TO I1 SERIES FOR TILE PATTERNS AND TILE EXTENT PLANS.
4. REFER TO SHEET I5.21 FOR CASEWORK TYPES AND DETAILS.
5. TERMINATE ALL INTERIOR FINISHES AT INSIDE CORNERS WHERE APPLICABLE, UNO.
6. PAINT CONCRETE COLUMNS TO MATCH ADJACENT WALL, TYP.

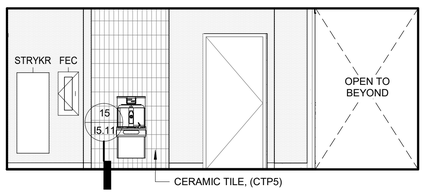

1B1 428 RECEPTION / LOBBY - EAST
1/4" = 1'-0"

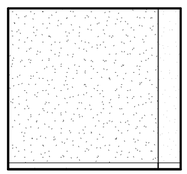

2A 426 ADMIN OFFICE - NORTH
1/4" = 1'-0"

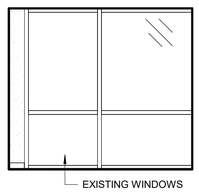

2B 426 ADMIN OFFICE - EAST
1/4" = 1'-0"

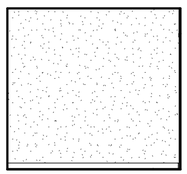

2C 426 ADMIN OFFICE - SOUTH
1/4" = 1'-0"

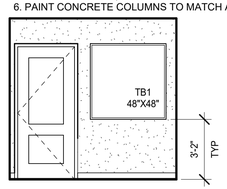

2D 426 ADMIN OFFICE - WEST
1/4" = 1'-0"

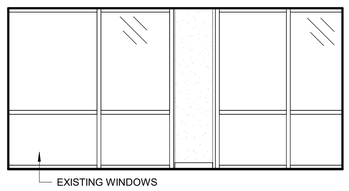

3A 409 GROUP ROOM - NORTH
1/4" = 1'-0"

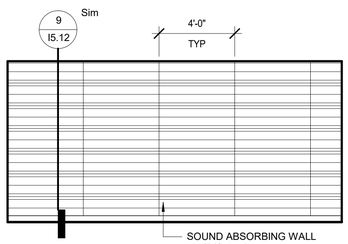

3B 409 GROUP ROOM - EAST
1/4" = 1'-0"

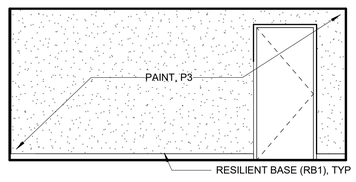

3C 409 GROUP ROOM - SOUTH
1/4" = 1'-0"

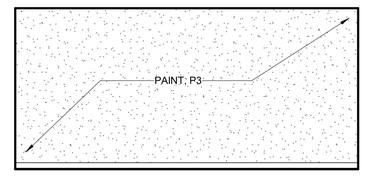

3D 409 GROUP ROOM - WEST
1/4" = 1'-0"

9/15/2026 3:42:36 PM

Portland State UNIVERSITY

PSU CAPITAL PROJECTS & CONSTRUCTION

RMNC
RICHARD & MAURINE NEUBERGER CENTER

4TH FLOOR SPHR
INTERIOR REMODEL

PSU CAMPUS | BLOCK: 087
1600 SW 4TH AVENUE
PORTLAND, OREGON 97201

bassetti architects DESIGN FOR GOOD
A Design Studio of HMC Architects

This document has been digitally signed
REGISTERED ARCHITECT JOSEPH ECHEVERRI 6439 PORTLAND, OREGON STATE OF OREGON
09/17/2026 8:50:45 AM

ISSUED FOR BID & PERMIT

9/18/2026
*HALF SIZE WHEN PRINTED AT

Sheet Title : INTERIOR ELEVATIONS - CLINIC

Revisions : *
Date : 9/18/2026

Drawn : BASSETTI
Checked : -

Sheet # : I3.01

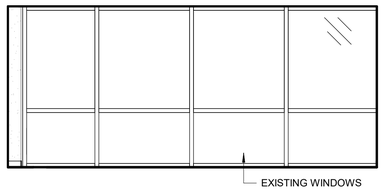

2A 467 STUDENT VIEWING ROOM - NORTH
1/4" = 1'-0"

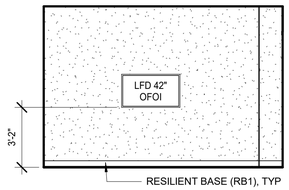

2B 467 STUDENT VIEWING ROOM - EAST
1/4" = 1'-0"

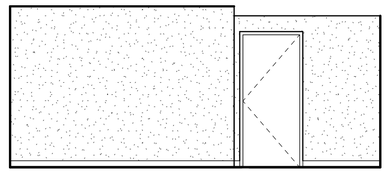

2C 467 STUDENT VIEWING ROOM - SOUTH
1/4" = 1'-0"

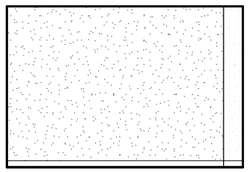

2D 467 STUDENT VIEWING ROOM - WEST
1/4" = 1'-0"

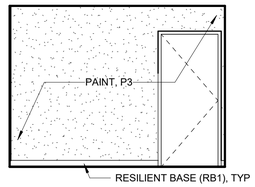

3A TYPICAL SMALL VIEWING ROOM - NORTH
1/4" = 1'-0"

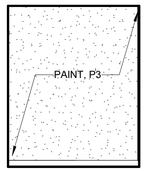

3B TYPICAL SMALL VIEWING ROOM - EAST
1/4" = 1'-0"

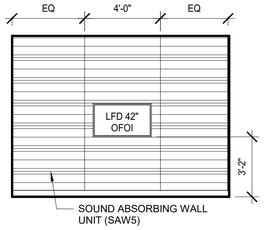

3C TYPICAL SMALL VIEWING ROOM - SOUTH
1/4" = 1'-0"



3D TYPICAL SMALL VIEWING ROOM - WEST
1/4" = 1'-0"

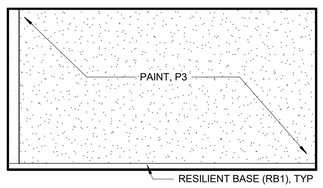

4A 424 CLINIC - K AUDIOLOGY - NORTH
1/4" = 1'-0"

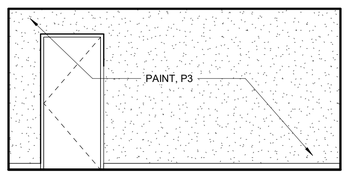

4B 424 CLINIC - K AUDIOLOGY - EAST
1/4" = 1'-0"

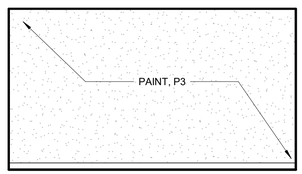

4C 424 CLINIC - K AUDIOLOGY - SOUTH
1/4" = 1'-0"

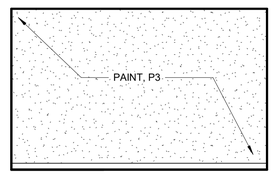

4D 424 CLINIC - K AUDIOLOGY - WEST
1/4" = 1'-0"

INTERIOR FINISH LEGEND

SURFACE

- 098433 SOUND ABSORBING WALL PANEL (SAW1)
- 098433 SOUND ABSORBING WALL PANEL (SAW2)
- 098433 SOUND ABSORBING WALL PANEL (SAW3)
- 098433 SOUND ABSORBING WALL PANEL (SAW4)
- 098433SOUND ABSORBING WALL PANEL (SAW5)
- 098433 SOUND ABSORBING WALL PANEL (SAW6)
- 064216 HARDWOOD VENEER PANEL (HVP1)
- 064023 INTERIOR TRIM (WD1)
- 097200 TACKABLE WALL COVERING (TWC1)
- 088413 DECORATIVE PLASTIC GLAZING (DPGL1)
- 088413 DECORATIVE PLASTIC GLAZING (DPGL2)
- 088413 DECORATIVE PLASTIC GLAZING (DPGL3)
- 088413 DECORATIVE PLASTIC GLAZING (DPGL4)
- 088413 DECORATIVE PLASTIC GLAZING (DPGL5)
- 102600 IMPACT RESISTANT WALLCOVERING (IRWC1)
- 097200 HIGH PERFORMANCE WALL COVERING (HPWC1)
- 097200 HIGH PERFORMANCE WALL COVERING (HPWC2)
- 097200 HIGH PERFORMANCE WALL COVERING (HPWC3)
- 093000 CERAMIC TILE (CT#) TILE COLOR AND SIZE VARIES, REFER TO SHEET I1.11 AND FINISH SCHEDULE
- PAINTED GYPSUM BOARD, REFER TO ARCHITECTURE DRAWINGS FOR WALL TYPES

INTERIOR ELEVATION GENERAL NOTES

1. REFER TO ARCHITECTURE DRAWINGS FOR STANDARD MOUNTING HEIGHTS.
2. REFER TO I6 SERIES FOR FINISH SCHEDULES.
3. REFER TO I1 SERIES FOR TILE PATTERNS AND TILE EXTENT PLANS.
4. REFER TO SHEET I5.21 FOR CASEWORK TYPES AND DETAILS.
5. TERMINATE ALL INTERIOR FINISHES AT INSIDE CORNERS WHERE APPLICABLE, UNO.
6. PAINT CONCRETE COLUMNS TO MATCH ADJACENT WALL, TYP.

Portland State UNIVERSITY

PSU CAPITAL PROJECTS & CONSTRUCTION

RMNC
RICHARD & MAURINE NEUBERGER CENTER

4TH FLOOR SPHR
INTERIOR REMODEL

PSU CAMPUS | BLOCK: 087
1600 SW 4TH AVENUE
PORTLAND, OREGON 97201

bassetti architects DESIGN FOR GOOD
A Design Studio of HMC Architects

This document has been digitally signed

REGISTERED ARCHITECT JOSEPH ECHEVERRI 6430 PORTLAND, OREGON STATE OF OREGON

09/17/2026 8:50:45 AM

ISSUED FOR BID & PERMIT

9/18/2026

*HALF SIZE WHEN PRINTED AT

Sheet Title : INTERIOR ELEVATIONS - CLINIC

Revisions : *

Date : 9/18/2026

Drawn : BASSETTI

Checked : .

Sheet # : I3.02

9/15/2026 3:42:37 PM

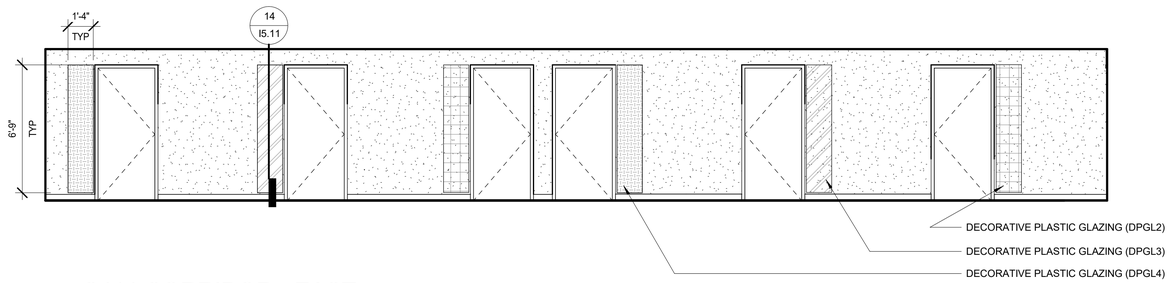

1B C411 CORRIDOR - EAST
1/4" = 1'-0"

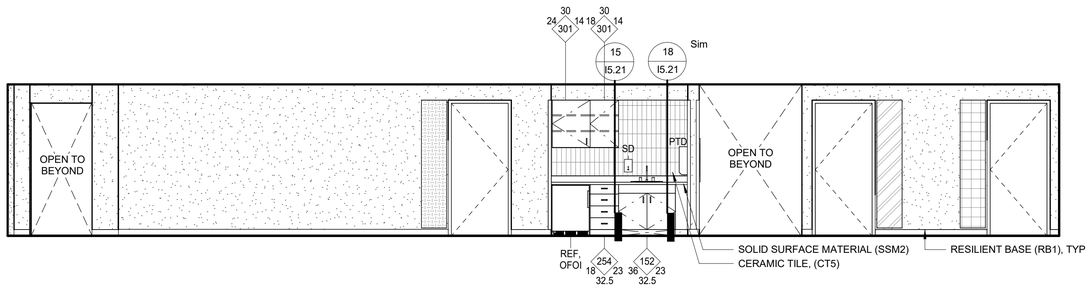

1D C411 CORRIDOR - WEST
1/4" = 1'-0"

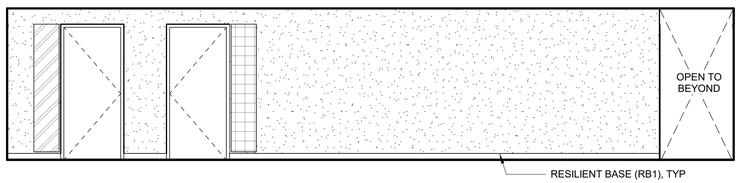

1A C411 CORRIDOR - NORTH
1/4" = 1'-0"

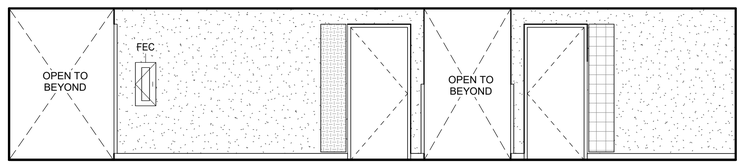

1C C411 CORRIDOR - SOUTH
1/4" = 1'-0"

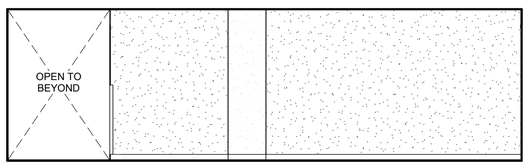

1B1 C411 CORRIDOR - EAST
1/4" = 1'-0"

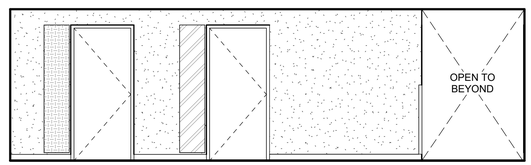

1D1 C411 CORRIDOR - WEST
1/4" = 1'-0"

INTERIOR FINISH LEGEND

SURFACE

- 098433 SOUND ABSORBING WALL PANEL (SAW1)
- 098433 SOUND ABSORBING WALL PANEL (SAW2)
- 098433 SOUND ABSORBING WALL PANEL (SAW3)
- 098433 SOUND ABSORBING WALL PANEL (SAW4)
- 098433SOUND ABSORBING WALL PANEL (SAW5)
- 098433 SOUND ABSORBING WALL PANEL (SAW6)
- 064216 HARDWOOD VENEER PANEL (HVP1)
- 064023 INTERIOR TRIM (WD1)
- 097200 TACKABLE WALL COVERING (TWC1)
- 088413 DECORATIVE PLASTIC GLAZING (DPGL1)
- 088413 DECORATIVE PLASTIC GLAZING (DPGL2)
- 088413 DECORATIVE PLASTIC GLAZING (DPGL3)
- 088413 DECORATIVE PLASTIC GLAZING (DPGL4)
- 088413 DECORATIVE PLASTIC GLAZING (DPGL5)
- 102600 IMPACT RESISTANT WALLCOVERING (IRWC1)
- 097200 HIGH PERFORMANCE WALL COVERING (HPWC1)
- 097200 HIGH PERFORMANCE WALL COVERING (HPWC2)
- 097200 HIGH PERFORMANCE WALL COVERING (HPWC3)
- 093000 CERAMIC TILE (CT#) TILE COLOR AND SIZE VARIES, REFER TO SHEET I1.11 AND FINISH SCHEDULE
- PAINTED GYPSUM BOARD, REFER TO ARCHITECTURE DRAWINGS FOR WALL TYPES

INTERIOR ELEVATION GENERAL NOTES

1. REFER TO ARCHITECTURE DRAWINGS FOR STANDARD MOUNTING HEIGHTS.
2. REFER TO I6 SERIES FOR FINISH SCHEDULES.
3. REFER TO I1 SERIES FOR TILE PATTERNS AND TILE EXTENT PLANS.
4. REFER TO SHEET I5.21 FOR CASEWORK TYPES AND DETAILS.
5. TERMINATE ALL INTERIOR FINISHES AT INSIDE CORNERS WHERE APPLICABLE, UNO.
6. PAINT CONCRETE COLUMNS TO MATCH ADJACENT WALL, TYP.

Portland State UNIVERSITY

PSU CAPITAL PROJECTS & CONSTRUCTION

RMNC
RICHARD & MAURINE NEUBERGER CENTER

4TH FLOOR SPHR
INTERIOR REMODEL

PSU CAMPUS | BLOCK: 087
1600 SW 4TH AVENUE
PORTLAND, OREGON 97201

bassetti architects DESIGN FOR GOOD
A Design Studio of HMC Architects

This document has been digitally signed

REGISTERED ARCHITECT JOSEPH ECHEVERRI 6430 PORTLAND, OREGON STATE OF OREGON

09/17/2026 8:50:45 AM

ISSUED FOR BID & PERMIT

9/18/2026

*HALF SIZE WHEN PRINTED AT

Sheet Title : INTERIOR ELEVATIONS - CLINIC

Revisions :	Date :
*	9/18/2026

Drawn : BASSETTI Checked : -

Sheet # : I3.03

9/15/2026 3:42:38 PM

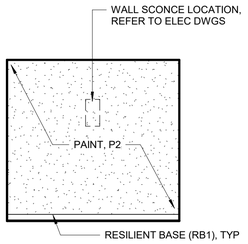

3A 423 CLINIC A - NORTH
1/4" = 1'-0"

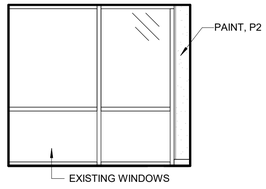

3B 423 CLINIC A - EAST
1/4" = 1'-0"

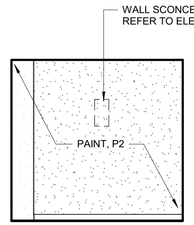

3C 423 CLINIC A - SOUTH
1/4" = 1'-0"

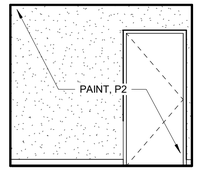

3D 423 CLINIC A - WEST
1/4" = 1'-0"

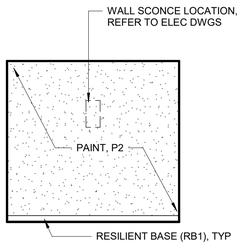

4A 419 CLINIC E -NORTH
1/4" = 1'-0"

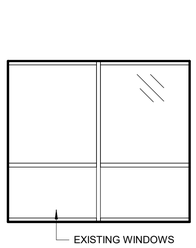

4B 419 CLINIIC E -EAST
1/4" = 1'-0"

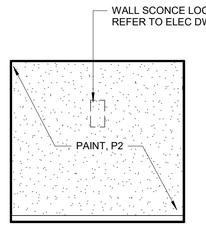

4C 419 CLINIC E - SOUTH
1/4" = 1'-0"

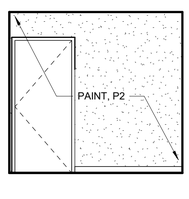

4D 419 CLINIC E - WEST
1/4" = 1'-0"

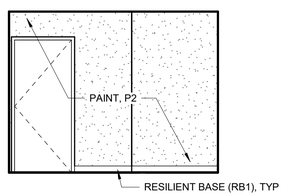

5D 418 CLINIC F - WEST
1/4" = 1'-0"

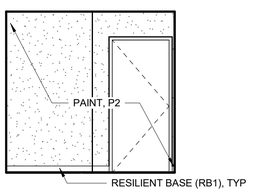

6B 417 CLINIC G - EAST
1/4" = 1'-0"

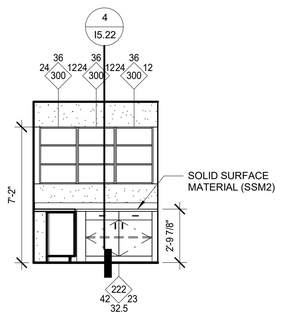

7A 425 SUPPLY - NORTH
1/4" = 1'-0"

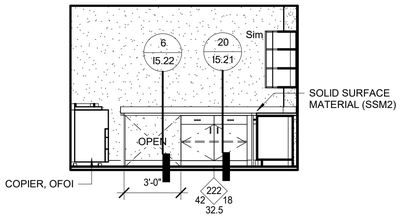

7D 425 SUPPLY - WEST
1/4" = 1'-0"

INTERIOR FINISH LEGEND

SURFACE

- 098433 SOUND ABSORBING WALL PANEL (SAW1)
- 098433 SOUND ABSORBING WALL PANEL (SAW2)
- 098433 SOUND ABSORBING WALL PANEL (SAW3)
- 098433 SOUND ABSORBING WALL PANEL (SAW4)
- 098433SOUND ABSORBING WALL PANEL (SAW5)
- 098433 SOUND ABSORBING WALL PANEL (SAW6)
- 064216 HARDWOOD VENEER PANEL (HVP1)
- 064023 INTERIOR TRIM (WD1)
- 097200 TACKABLE WALL COVERING (TWC1)
- 088413 DECORATIVE PLASTIC GLAZING (DPGL1)
- 088413 DECORATIVE PLASTIC GLAZING (DPGL2)
- 088413 DECORATIVE PLASTIC GLAZING (DPGL3)
- 088413 DECORATIVE PLASTIC GLAZING (DPGL4)
- 088413 DECORATIVE PLASTIC GLAZING (DPGL5)
- 102600 IMPACT RESISTANT WALLCOVERING (IRWC1)
- 097200 HIGH PERFORMANCE WALL COVERING (HPWC1)
- 097200 HIGH PERFORMANCE WALL COVERING (HPWC2)
- 097200 HIGH PERFORMANCE WALL COVERING (HPWC3)
- 093000 CERAMIC TILE (CT#) TILE COLOR AND SIZE VARIES, REFER TO SHEET I1.11 AND FINISH SCHEDULE
- PAINTED GYPSUM BOARD, REFER TO ARCHITECTURE DRAWINGS FOR WALL TYPES

INTERIOR ELEVATION GENERAL NOTES

1. REFER TO ARCHITECTURE DRAWINGS FOR STANDARD MOUNTING HEIGHTS.
2. REFER TO I6 SERIES FOR FINISH SCHEDULES.
3. REFER TO I1 SERIES FOR TILE PATTERNS AND TILE EXTENT PLANS.
4. REFER TO SHEET I5.21 FOR CASEWORK TYPES AND DETAILS.
5. TERMINATE ALL INTERIOR FINISHES AT INSIDE CORNERS WHERE APPLICABLE, UNO.
6. PAINT CONCRETE COLUMNS TO MATCH ADJACENT WALL, TYP.

Portland State UNIVERSITY

PSU CAPITAL PROJECTS & CONSTRUCTION

RMNC
RICHARD & MAURINE NEUBERGER CENTER

4TH FLOOR SPHR
INTERIOR REMODEL

PSU CAMPUS | BLOCK: 087
1600 SW 4TH AVENUE
PORTLAND, OREGON 97201

bassetti architects DESIGN FOR GOOD
A Design Studio of HMC Architects

This document has been digitally signed

REGISTERED ARCHITECT JOSEPH ECHEVERRI 6439 PORTLAND, OREGON STATE OF OREGON

09/17/2026 8:50:45 AM

ISSUED FOR BID & PERMIT

9/18/2026

*HALF SIZE WHEN PRINTED AT

Sheet Title : INTERIOR ELEVATIONS - CLINIC

Revisions : *

Date : 9/18/2026

Drawn : BASSETTI

Checked : -

Sheet # : I3.04

9/15/2026 3:42:39 PM

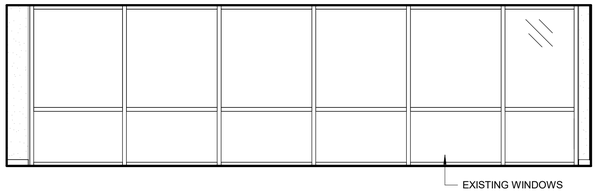

1A 466 GRAD SEMINAR ROOM - NORTH
1/4" = 1'-0"

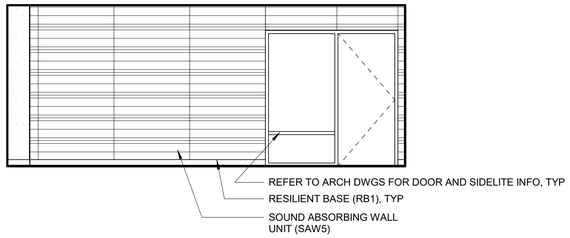

1B 466 GRAD SEMINAR ROOM - EAST
1/4" = 1'-0"

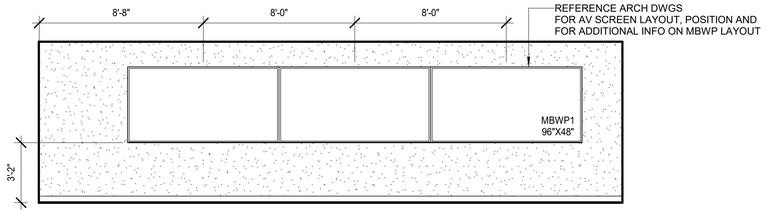

1C 466 GRAD SEMINAR ROOM - SOUTH
1/4" = 1'-0"

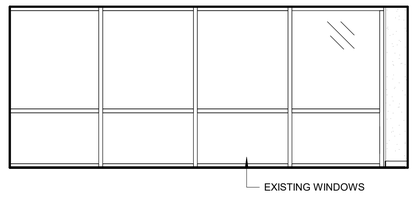

1D 466 GRAD SEMINAR ROOM - WEST
1/4" = 1'-0"

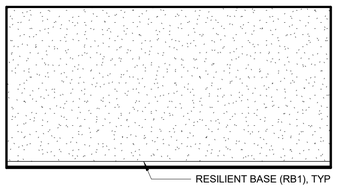

2A 464 TOY WORKROOM - NORTH
1/4" = 1'-0"

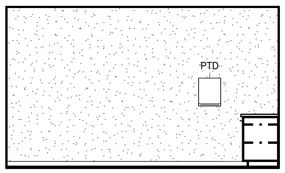

2B 464 TOY WORKROOM - EAST
1/4" = 1'-0"

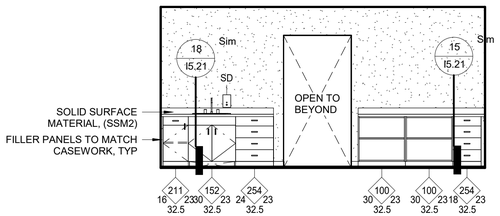

2C 464 TOY WORKROOM - SOUTH
1/4" = 1'-0"

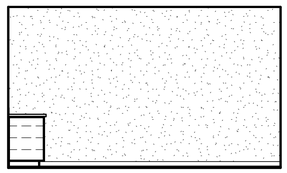

2D 464 TOY WORKROOM - WEST
1/4" = 1'-0"

INTERIOR FINISH LEGEND

SURFACE

- 098433 SOUND ABSORBING WALL PANEL (SAW1)
- 098433 SOUND ABSORBING WALL PANEL (SAW2)
- 098433 SOUND ABSORBING WALL PANEL (SAW3)
- 098433 SOUND ABSORBING WALL PANEL (SAW4)
- 098433SOUND ABSORBING WALL PANEL (SAW5)
- 098433 SOUND ABSORBING WALL PANEL (SAW6)
- 064216 HARDWOOD VENEER PANEL (HVP1)
- 064023 INTERIOR TRIM (WD1)
- 097200 TACKABLE WALL COVERING (TWC1)
- 088413 DECORATIVE PLASTIC GLAZING (DPGL1)
- 088413 DECORATIVE PLASTIC GLAZING (DPGL2)
- 088413 DECORATIVE PLASTIC GLAZING (DPGL3)
- 088413 DECORATIVE PLASTIC GLAZING (DPGL4)
- 088413 DECORATIVE PLASTIC GLAZING (DPGL5)
- 102600 IMPACT RESISTANT WALLCOVERING (IRWC1)
- 097200 HIGH PERFORMANCE WALL COVERING (HPWC1)
- 097200 HIGH PERFORMANCE WALL COVERING (HPWC2)
- 097200 HIGH PERFORMANCE WALL COVERING (HPWC3)
- 093000 CERAMIC TILE (CT#) TILE COLOR AND SIZE VARIES, REFER TO SHEET I1.11 AND FINISH SCHEDULE
- PAINTED GYPSUM BOARD, REFER TO ARCHITECTURE DRAWINGS FOR WALL TYPES

INTERIOR ELEVATION GENERAL NOTES

1. REFER TO ARCHITECTURE DRAWINGS FOR STANDARD MOUNTING HEIGHTS.
2. REFER TO I6 SERIES FOR FINISH SCHEDULES.
3. REFER TO I1 SERIES FOR TILE PATTERNS AND TILE EXTENT PLANS.
4. REFER TO SHEET I5.21 FOR CASEWORK TYPES AND DETAILS.
5. TERMINATE ALL INTERIOR FINISHES AT INSIDE CORNERS WHERE APPLICABLE, UNO.
6. PAINT CONCRETE COLUMNS TO MATCH ADJACENT WALL, TYP.

Portland State UNIVERSITY

PSU CAPITAL PROJECTS & CONSTRUCTION

RMNC
RICHARD & MAURINE NEUBERGER CENTER

4TH FLOOR SPHR
INTERIOR REMODEL

PSU CAMPUS | BLOCK: 087
1600 SW 4TH AVENUE
PORTLAND, OREGON 97201

bassetti architects DESIGN FOR GOOD
A Design Studio of HMC Architects

This document has been digitally signed
REGISTERED ARCHITECT JOSEPH ECHEVERRI 6430 PORTLAND, OREGON STATE OF OREGON
09/17/2026 8:50:46 AM

ISSUED FOR BID & PERMIT

9/18/2026
*HALF SIZE WHEN PRINTED AT

Sheet Title : INTERIOR ELEVATIONS - STUDENT LEARNING

Revisions :	Date :
*	9/18/2026

Drawn : BASSETTI Checked : -

Sheet # : I3.05

9/15/2026 3:42:40 PM

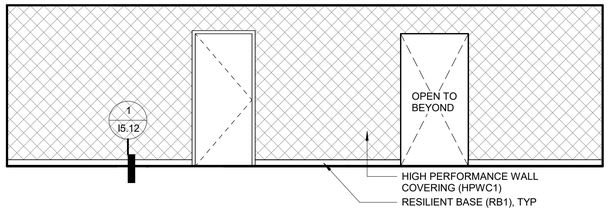

1A 85 STUDENT WORK / STUDY AREA - NORTH

1/4" = 1'-0"

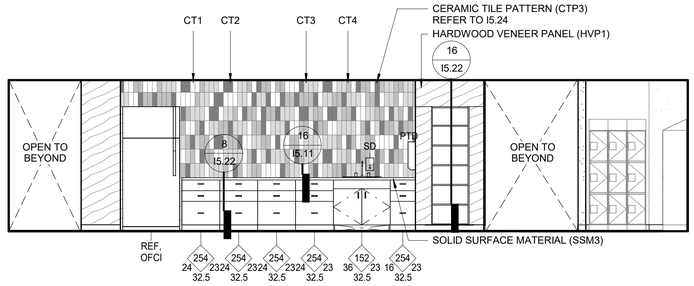

1B 85 STUDENT WORK / STUDY AREA - EAST

1/4" = 1'-0"

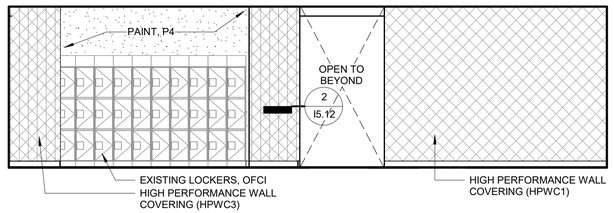

1C 85 STUDENT WORK / STUDY AREA - SOUTH

1/4" = 1'-0"

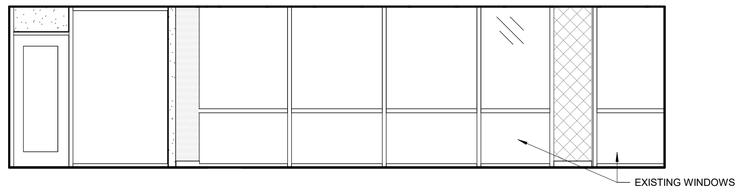

1D 85 STUDENT WORK / STUDY AREA - WEST

1/4" = 1'-0"

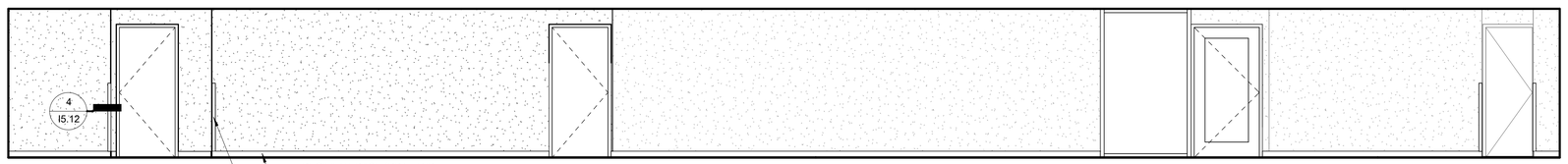

2A C424 CORRIDOR EAST

1/4" = 1'-0"

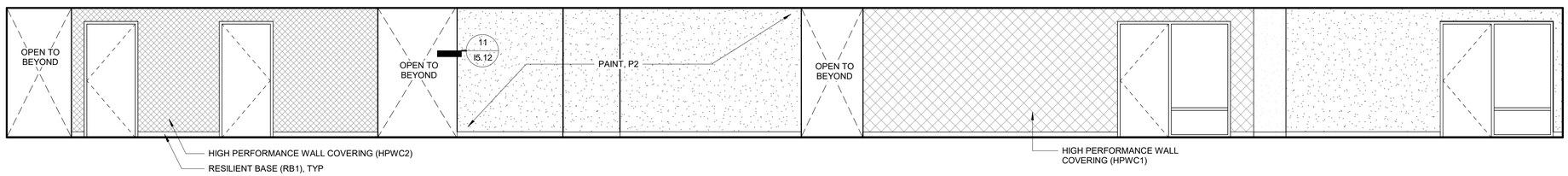

2B C424 CORRIDOR - WEST

1/4" = 1'-0"

INTERIOR FINISH LEGEND

SURFACE

- 098433 SOUND ABSORBING WALL PANEL (SAW1)
- 098433 SOUND ABSORBING WALL PANEL (SAW2)
- 098433 SOUND ABSORBING WALL PANEL (SAW3)
- 098433 SOUND ABSORBING WALL PANEL (SAW4)
- 098433SOUND ABSORBING WALL PANEL (SAW5)
- 098433 SOUND ABSORBING WALL PANEL (SAW6)
- 064216 HARDWOOD VENEER PANEL (HVP1)
- 064023 INTERIOR TRIM (WD1)
- 097200 TACKABLE WALL COVERING (TWC1)
- 088413 DECORATIVE PLASTIC GLAZING (DPGL1)
- 088413 DECORATIVE PLASTIC GLAZING (DPGL2)
- 088413 DECORATIVE PLASTIC GLAZING (DPGL3)
- 088413 DECORATIVE PLASTIC GLAZING (DPGL4)
- 088413 DECORATIVE PLASTIC GLAZING (DPGL5)
- 102600 IMPACT RESISTANT WALLCOVERING (IRWC1)
- 097200 HIGH PERFORMANCE WALL COVERING (HPWC1)
- 097200 HIGH PERFORMANCE WALL COVERING (HPWC2)
- 097200 HIGH PERFORMANCE WALL COVERING (HPWC3)
- 093000 CERAMIC TILE (CT#) TILE COLOR AND SIZE VARIES, REFER TO SHEET I1.11 AND FINISH SCHEDULE
- PAINTED GYPSUM BOARD, REFER TO ARCHITECTURE DRAWINGS FOR WALL TYPES

INTERIOR ELEVATION GENERAL NOTES

1. REFER TO ARCHITECTURE DRAWINGS FOR STANDARD MOUNTING HEIGHTS.
2. REFER TO I6 SERIES FOR FINISH SCHEDULES.
3. REFER TO I1 SERIES FOR TILE PATTERNS AND TILE EXTENT PLANS.
4. REFER TO SHEET I5.21 FOR CASEWORK TYPES AND DETAILS.
5. TERMINATE ALL INTERIOR FINISHES AT INSIDE CORNERS WHERE APPLICABLE, UNO.
6. PAINT CONCRETE COLUMNS TO MATCH ADJACENT WALL, TYP.

Portland State UNIVERSITY

PSU CAPITAL PROJECTS & CONSTRUCTION

RMNC
RICHARD & MAURINE NEUBERGER CENTER

4TH FLOOR SPHR
INTERIOR REMODEL

PSU CAMPUS | BLOCK: 087
1600 SW 4TH AVENUE
PORTLAND, OREGON 97201

bassetti architects DESIGN FOR GOOD
A Design Studio of HMC Architects

This document has been digitally signed

REGISTERED ARCHITECT JOSEPH ECHEVERRI 6430 PORTLAND, OREGON STATE OF OREGON

09/17/2026 8:50:46 AM

ISSUED FOR BID & PERMIT

9/18/2026

*HALF SIZE WHEN PRINTED AT

Sheet Title : INTERIOR ELEVATIONS - STUDENT LEARNING

Revisions :	Date :
*	9/18/2026

Drawn : BASSETTI Checked : -

Sheet # : I3.06

9/15/2026 3:42:41 PM

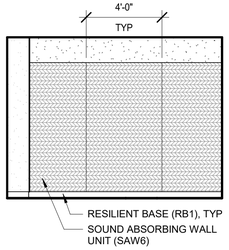

1A TYPICAL OFFICE - NORTH
1/4" = 1'-0"

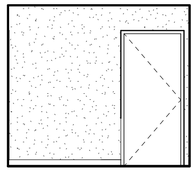

1B TYPICAL OFFICE - EAST
1/4" = 1'-0"

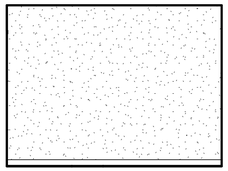

1C TYPICAL OFFICE - SOUTH
1/4" = 1'-0"

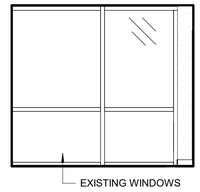

1D TYPICAL OFFICE - WEST
1/4" = 1'-0"

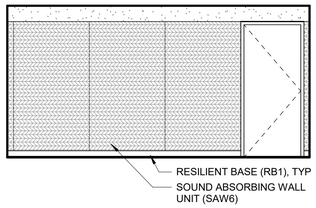

3A 449 OFFICE 6 - DIRECTOR - NORTH
1/4" = 1'-0"

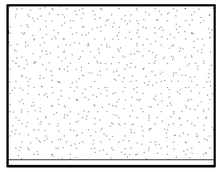

3B 449 OFFICE 6 - DIRECTOR - EAST
1/4" = 1'-0"

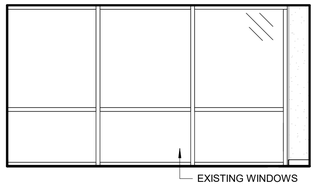

3C 449 OFFICEC 6 - DIRECTOR - SOUTH
1/4" = 1'-0"

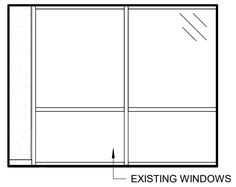

3D 449 OFFICE 6 - DIRECTOR - WEST
1/4" = 1'-0"

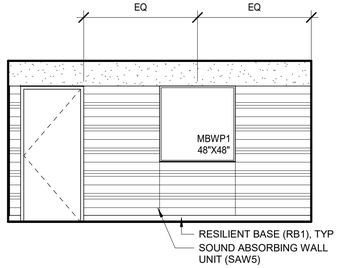

4A 438 SMALL CONF ROOM - NORTH
1/4" = 1'-0"

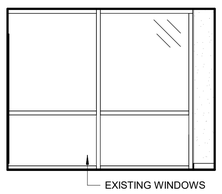

4B 438 SMALL CONF ROOM - EAST
1/4" = 1'-0"

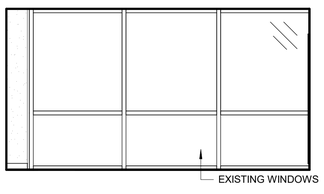

4C 438 SMALL CONF ROOM - SOUTH
1/4" = 1'-0"

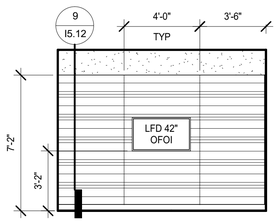

4D 438 SMALL CONF ROOM - WEST
1/4" = 1'-0"

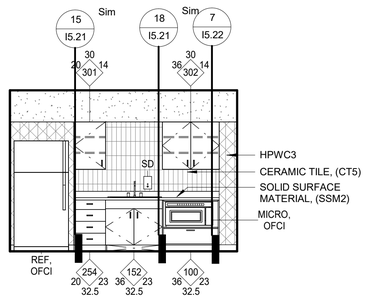

5A 433 CONFERENCE ROOM / BREAKROOM - NORTH
1/4" = 1'-0"

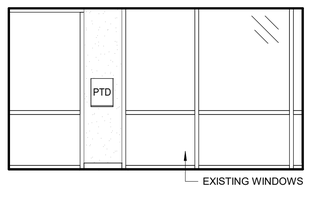

5B 433 CONFERENCE ROOM / BREAKROOM - EAST
1/4" = 1'-0"

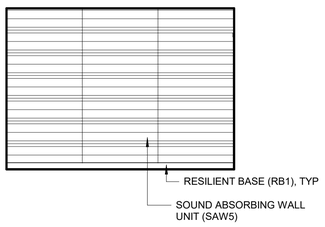

5C 433 CONFERENCE ROOM / BREAKROOM - SOUTH
1/4" = 1'-0"

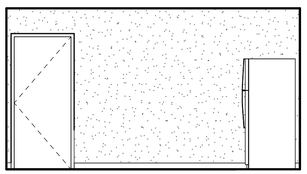

5D 433 CONFERENCE ROOM / BREAKROOM - WEST
1/4" = 1'-0"

INTERIOR FINISH LEGEND

SURFACE

- 098433 SOUND ABSORBING WALL PANEL (SAW1)
- 098433 SOUND ABSORBING WALL PANEL (SAW2)
- 098433 SOUND ABSORBING WALL PANEL (SAW3)
- 098433 SOUND ABSORBING WALL PANEL (SAW4)
- 098433SOUND ABSORBING WALL PANEL (SAW5)
- 098433 SOUND ABSORBING WALL PANEL (SAW6)
- 064216 HARDWOOD VENEER PANEL (HVP1)
- 064023 INTERIOR TRIM (WD1)
- 097200 TACKABLE WALL COVERING (TWC1)
- 088413 DECORATIVE PLASTIC GLAZING (DPGL1)
- 088413 DECORATIVE PLASTIC GLAZING (DPGL2)
- 088413 DECORATIVE PLASTIC GLAZING (DPGL3)
- 088413 DECORATIVE PLASTIC GLAZING (DPGL4)
- 088413 DECORATIVE PLASTIC GLAZING (DPGL5)
- 102600 IMPACT RESISTANT WALLCOVERING (IRWC1)
- 097200 HIGH PERFORMANCE WALL COVERING (HPWC1)
- 097200 HIGH PERFORMANCE WALL COVERING (HPWC2)
- 097200 HIGH PERFORMANCE WALL COVERING (HPWC3)
- 093000 CERAMIC TILE (CT#) TILE COLOR AND SIZE VARIES, REFER TO SHEET I1.11 AND FINISH SCHEDULE
- PAINTED GYPSUM BOARD, REFER TO ARCHITECTURE DRAWINGS FOR WALL TYPES

INTERIOR ELEVATION GENERAL NOTES

1. REFER TO ARCHITECTURE DRAWINGS FOR STANDARD MOUNTING HEIGHTS.
2. REFER TO I0 I6 SERIES FOR FINISH SCHEDULES.
3. REFER TO I1 SERIES FOR TILE PATTERNS AND TILE EXTENT PLANS.
4. REFER TO SHEET I5.21 FOR CASEWORK TYPES AND DETAILS.
5. TERMINATE ALL INTERIOR FINISHES AT INSIDE CORNERS WHERE APPLICABLE, UNO.
6. PAINT CONCRETE COLUMNS TO MATCH ADJACENT WALL, TYP.

Portland State UNIVERSITY

PSU CAPITAL PROJECTS & CONSTRUCTION

RMNC
RICHARD & MAURINE NEUBERGER CENTER

4TH FLOOR SPHR
INTERIOR REMODEL

PSU CAMPUS | BLOCK: 087
1600 SW 4TH AVENUE
PORTLAND, OREGON 97201

bassetti architects DESIGN FOR GOOD
A Design Studio of HMC Architects

This document has been digitally signed
REGISTERED ARCHITECT JOSEPH ECHEVERRI 6439 PORTLAND, OREGON STATE OF OREGON
09/17/2026 8:50:46 AM

ISSUED FOR BID & PERMIT

9/18/2026
*HALF SIZE WHEN PRINTED AT

Sheet Title : INTERIOR ELEVATIONS - ADMIN

Revisions : *
Date : 9/18/2026

Drawn : BASSETTI
Checked : -

Sheet # : I3.07

9/15/2026 3:42:43 PM

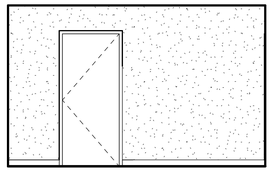

1A TYPICAL RESEARCH LAB - NORTH
1/4" = 1'-0"

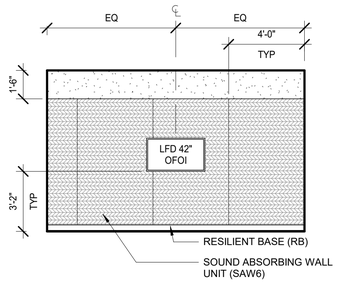

1B TYPICAL RESEARCH LAB - EAST
1/4" = 1'-0"

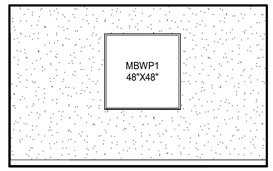

1C TYPICAL RESEARCH LAB - SOUTH
1/4" = 1'-0"

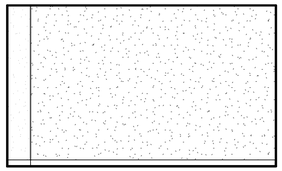

1D TYPICAL RESEARCH LAB - WEST
1/4" = 1'-0"

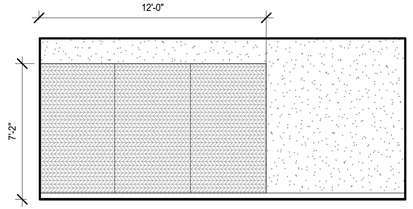

2A 456 RESEARCH LAB 1 - NORTH
1/4" = 1'-0"

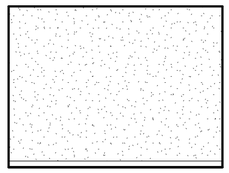

2B 456 RESEARCH LAB 1 - EAST
1/4" = 1'-0"

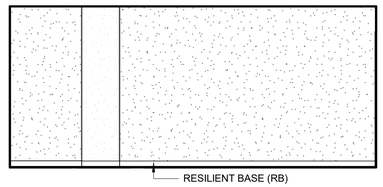

2C 456 RESEARCH LAB 1 - SOUTH
1/4" = 1'-0"

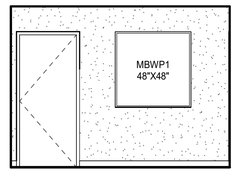

2D 456 RESEARCH LAB 1 - WEST
1/4" = 1'-0"

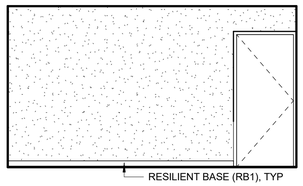

3B C415 SINK ALCOVE - EAST
1/4" = 1'-0"

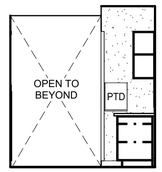

3C C415 SINK ALCOVE - SOUTH
1/4" = 1'-0"

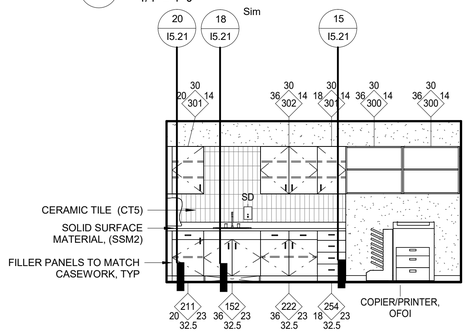

3D C415 SINK ALCOVE - WEST
1/4" = 1'-0"

INTERIOR FINISH LEGEND

SURFACE

- 098433 SOUND ABSORBING WALL PANEL (SAW1)
- 098433 SOUND ABSORBING WALL PANEL (SAW2)
- 098433 SOUND ABSORBING WALL PANEL (SAW3)
- 098433 SOUND ABSORBING WALL PANEL (SAW4)
- 098433SOUND ABSORBING WALL PANEL (SAW5)
- 098433 SOUND ABSORBING WALL PANEL (SAW6)
- 064216 HARDWOOD VENEER PANEL (HVP1)
- 064023 INTERIOR TRIM (WD1)
- 097200 TACKABLE WALL COVERING (TWC1)
- 088413 DECORATIVE PLASTIC GLAZING (DPGL1)
- 088413 DECORATIVE PLASTIC GLAZING (DPGL2)
- 088413 DECORATIVE PLASTIC GLAZING (DPGL3)
- 088413 DECORATIVE PLASTIC GLAZING (DPGL4)
- 088413 DECORATIVE PLASTIC GLAZING (DPGL5)
- 102600 IMPACT RESISTANT WALLCOVERING (IRWC1)
- 097200 HIGH PERFORMANCE WALL COVERING (HPWC1)
- 097200 HIGH PERFORMANCE WALL COVERING (HPWC2)
- 097200 HIGH PERFORMANCE WALL COVERING (HPWC3)
- 093000 CERAMIC TILE (CT#) TILE COLOR AND SIZE VARIES, REFER TO SHEET I1.11 AND FINISH SCHEDULE
- PAINTED GYPSUM BOARD, REFER TO ARCHITECTURE DRAWINGS FOR WALL TYPES

INTERIOR ELEVATION GENERAL NOTES

1. REFER TO ARCHITECTURE DRAWINGS FOR STANDARD MOUNTING HEIGHTS.
2. REFER TO I6 SERIES FOR FINISH SCHEDULES.
3. REFER TO I1 SERIES FOR TILE PATTERNS AND TILE EXTENT PLANS.
4. REFER TO SHEET I5.21 FOR CASEWORK TYPES AND DETAILS.
5. TERMINATE ALL INTERIOR FINISHES AT INSIDE CORNERS WHERE APPLICABLE, UNO.
6. PAINT CONCRETE COLUMNS TO MATCH ADJACENT WALL, TYP.

Portland State UNIVERSITY

PSU CAPITAL PROJECTS & CONSTRUCTION

RMNC
RICHARD & MAURINE NEUBERGER CENTER

4TH FLOOR SPHR
INTERIOR REMODEL

PSU CAMPUS | BLOCK: 087
1600 SW 4TH AVENUE
PORTLAND, OREGON 97201

bassetti architects DESIGN FOR GOOD
A Design Studio of HMC Architects

This document has been digitally signed

REGISTERED ARCHITECT JOSEPH ECHEVERRI 6439 PORTLAND, OREGON STATE OF OREGON

09/17/2026 8:50:46 AM

ISSUED FOR BID & PERMIT

9/18/2026

*HALF SIZE WHEN PRINTED AT

Sheet Title : INTERIOR ELEVATIONS - ADMIN

Revisions : *

Date : 9/18/2026

Drawn : BASSETTI

Checked : -

Sheet # : I3.08

9/15/2026 3:42:44 PM

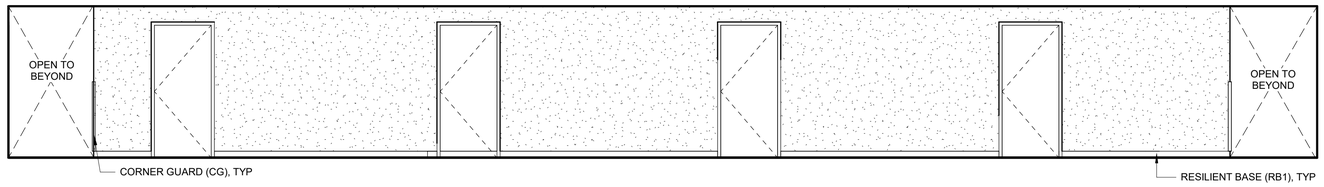

2A C424 CORRIDOR - NORTH
1/4" = 1'-0"

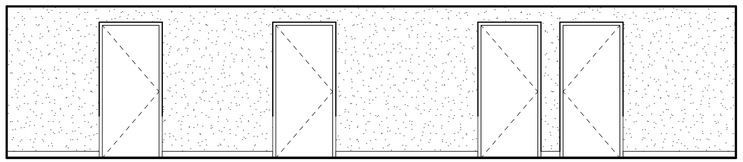

2B C424 CORRIDOR - EAST
1/4" = 1'-0"

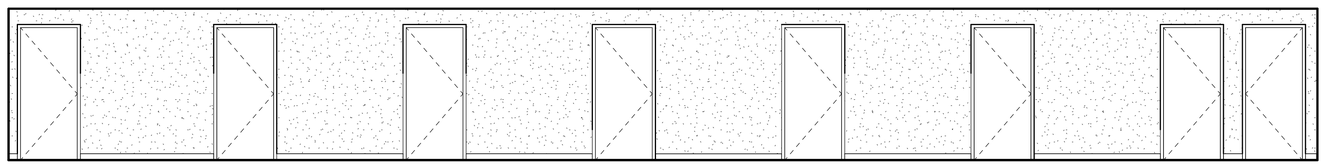

2C C424 CORRIDOR - SOUTH
1/4" = 1'-0"

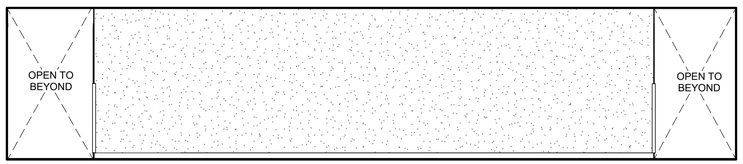

2D C424 CORRIDOR - WEST
1/4" = 1'-0"

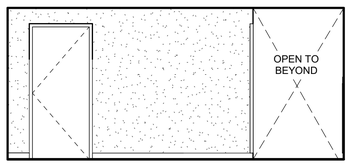

2A1 C424 CORRIDOR ALCOVE - NORTH
1/4" = 1'-0"

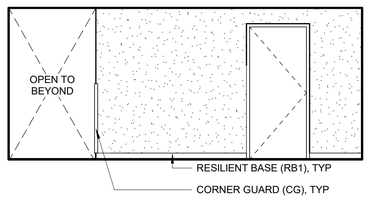

2C1 C424 CORRIDOR ALCOVE - EAST
1/4" = 1'-0"

INTERIOR FINISH LEGEND

SURFACE

- 098433 SOUND ABSORBING WALL PANEL (SAW1)
- 098433 SOUND ABSORBING WALL PANEL (SAW2)
- 098433 SOUND ABSORBING WALL PANEL (SAW3)
- 098433 SOUND ABSORBING WALL PANEL (SAW4)
- 098433SOUND ABSORBING WALL PANEL (SAW5)
- 098433 SOUND ABSORBING WALL PANEL (SAW6)
- 064216 HARDWOOD VENEER PANEL (HVP1)
- 064023 INTERIOR TRIM (WD1)
- 097200 TACKABLE WALL COVERING (TWC1)
- 088413 DECORATIVE PLASTIC GLAZING (DPGL1)
- 088413 DECORATIVE PLASTIC GLAZING (DPGL2)
- 088413 DECORATIVE PLASTIC GLAZING (DPGL3)
- 088413 DECORATIVE PLASTIC GLAZING (DPGL4)
- 088413 DECORATIVE PLASTIC GLAZING (DPGL5)
- 102600 IMPACT RESISTANT WALLCOVERING (IRWC1)
- 097200 HIGH PERFORMANCE WALL COVERING (HPWC1)
- 097200 HIGH PERFORMANCE WALL COVERING (HPWC2)
- 097200 HIGH PERFORMANCE WALL COVERING (HPWC3)
- 093000 CERAMIC TILE (CT#) TILE COLOR AND SIZE VARIES, REFER TO SHEET I1.11 AND FINISH SCHEDULE
- PAINTED GYPSUM BOARD, REFER TO ARCHITECTURE DRAWINGS FOR WALL TYPES

INTERIOR ELEVATION GENERAL NOTES

1. REFER TO ARCHITECTURE DRAWINGS FOR STANDARD MOUNTING HEIGHTS.
2. REFER TO I6 SERIES FOR FINISH SCHEDULES.
3. REFER TO I1 SERIES FOR TILE PATTERNS AND TILE EXTENT PLANS.
4. REFER TO SHEET I5.21 FOR CASEWORK TYPES AND DETAILS.
5. TERMINATE ALL INTERIOR FINISHES AT INSIDE CORNERS WHERE APPLICABLE, UNO.
6. PAINT CONCRETE COLUMNS TO MATCH ADJACENT WALL, TYP.

Portland State UNIVERSITY

PSU CAPITAL PROJECTS & CONSTRUCTION

RMNC
RICHARD & MAURINE NEUBERGER CENTER

4TH FLOOR SPHR
INTERIOR REMODEL

PSU CAMPUS | BLOCK: 087
1600 SW 4TH AVENUE
PORTLAND, OREGON 97201

bassetti architects DESIGN FOR GOOD
A Design Studio of HMC Architects

This document has been digitally signed

REGISTERED ARCHITECT JOSEPH ECHEVERRI 6430 PORTLAND, OREGON STATE OF OREGON

09/17/2026 8:50:46 AM

ISSUED FOR BID & PERMIT

9/18/2026

*HALF SIZE WHEN PRINTED AT

Sheet Title : INTERIOR ELEVATIONS - ADMIN

Revisions :	Date :
*	9/18/2026

Drawn : BASSETTI Checked : -

Sheet # : I3.09

9/15/2026 3:42:45 PM

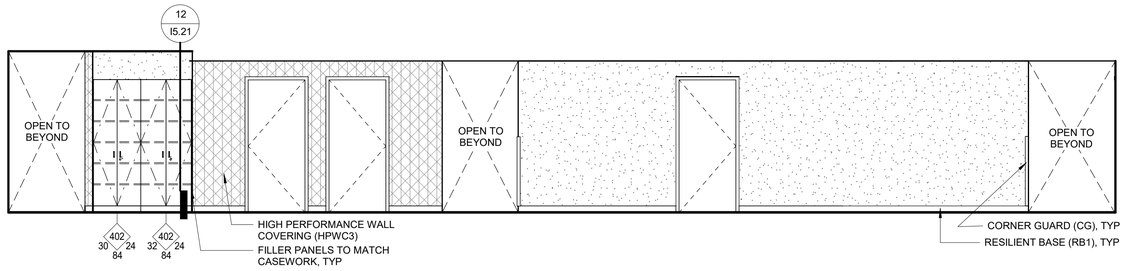

1B C424 CORRIDOR - EAST

1/4" = 1'-0"

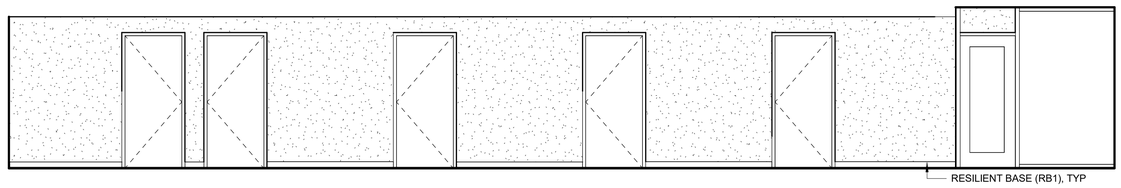

1D C424 CORRIDOR - WEST

1/4" = 1'-0"

9/15/2026 3:42:45 PM

INTERIOR FINISH LEGEND

SURFACE

- 098433 SOUND ABSORBING WALL PANEL (SAW1)
- 098433 SOUND ABSORBING WALL PANEL (SAW2)
- 098433 SOUND ABSORBING WALL PANEL (SAW3)
- 098433 SOUND ABSORBING WALL PANEL (SAW4)
- 098433SOUND ABSORBING WALL PANEL (SAW5)
- 098433 SOUND ABSORBING WALL PANEL (SAW6)
- 064216 HARDWOOD VENEER PANEL (HVP1)
- 064023 INTERIOR TRIM (WD1)
- 097200 TACKABLE WALL COVERING (TWC1)
- 088413 DECORATIVE PLASTIC GLAZING (DPGL1)
- 088413 DECORATIVE PLASTIC GLAZING (DPGL2)
- 088413 DECORATIVE PLASTIC GLAZING (DPGL3)
- 088413 DECORATIVE PLASTIC GLAZING (DPGL4)
- 088413 DECORATIVE PLASTIC GLAZING (DPGL5)
- 102600 IMPACT RESISTANT WALLCOVERING (IRWC1)
- 097200 HIGH PERFORMANCE WALL COVERING (HPWC1)
- 097200 HIGH PERFORMANCE WALL COVERING (HPWC2)
- 097200 HIGH PERFORMANCE WALL COVERING (HPWC3)
- 093000 CERAMIC TILE (CT#) TILE COLOR AND SIZE VARIES, REFER TO SHEET I1.11 AND FINISH SCHEDULE
- PAINTED GYPSUM BOARD, REFER TO ARCHITECTURE DRAWINGS FOR WALL TYPES

INTERIOR ELEVATION GENERAL NOTES

1. REFER TO ARCHITECTURE DRAWINGS FOR STANDARD MOUNTING HEIGHTS.
2. REFER TO I6 SERIES FOR FINISH SCHEDULES.
3. REFER TO I1 SERIES FOR TILE PATTERNS AND TILE EXTENT PLANS.
4. REFER TO SHEET I5.21 FOR CASEWORK TYPES AND DETAILS.
5. TERMINATE ALL INTERIOR FINISHES AT INSIDE CORNERS WHERE APPLICABLE, UNO.
6. PAINT CONCRETE COLUMNS TO MATCH ADJACENT WALL, TYP.

Portland State UNIVERSITY

PSU CAPITAL PROJECTS & CONSTRUCTION

RMNC
RICHARD & MAURINE NEUBERGER CENTER

4TH FLOOR SPHR
INTERIOR REMODEL

PSU CAMPUS | BLOCK: 087
1600 SW 4TH AVENUE
PORTLAND, OREGON 97201

bassetti architects DESIGN FOR GOOD
A Design Studio of HMC Architects

This document has been digitally signed

REGISTERED ARCHITECT JOSEPH ECHEVERRI 6430 PORTLAND, OREGON STATE OF OREGON

09/17/2026 8:50:46 AM

ISSUED FOR BID & PERMIT

9/18/2026

*HALF SIZE WHEN PRINTED AT

Sheet Title : INTERIOR ELEVATIONS - ADMIN

Revisions : *

Date : 9/18/2026

Drawn : BASSETTI

Checked : -

Sheet # : I3.10

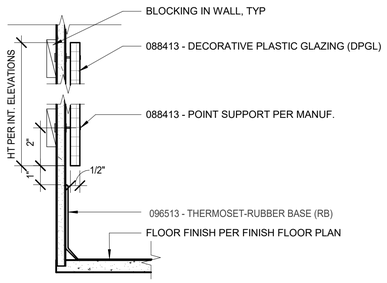

14 DECORATIVE PLASTIC GLAZING PANEL SECTION DETAIL

3" = 1'-0"

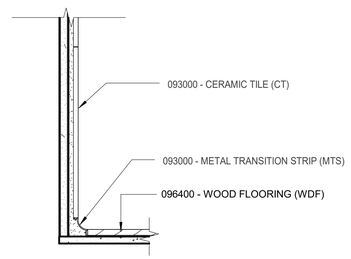

15 WALL TILE AND WOOD FLOOR SECTION

3" = 1'-0"

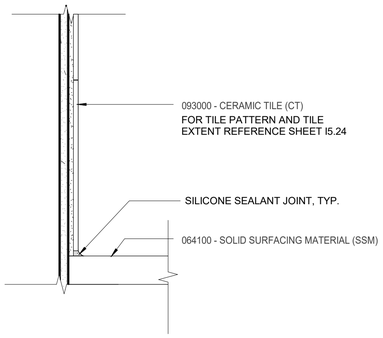

16 WALL TILE AND COUNTERTOP SECTION

3" = 1'-0"

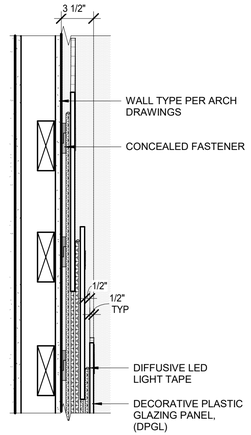

11 RECEPTION FEATURE WALL SECTION

1 1/2" = 1'-0"

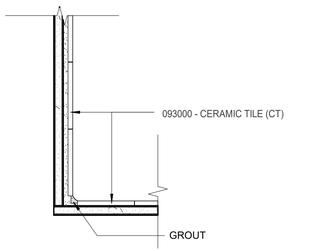

12 WALL TILE AT INSIDE CORNER PLAN DETAIL

3" = 1'-0"

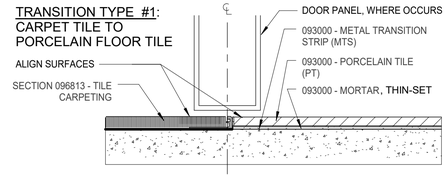

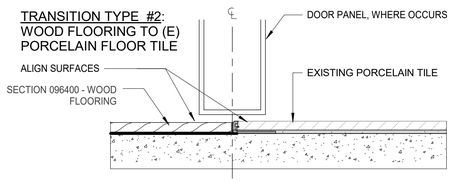

1 FLOOR TRANSITIONS - SAME HEIGHT

6" = 1'-0"

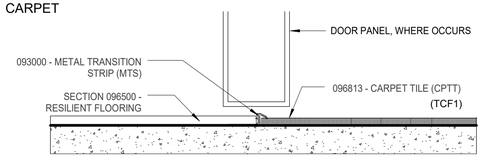

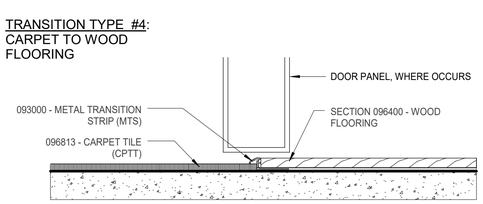

2 FLOOR TRANSITIONS - SLOPED

6" = 1'-0"

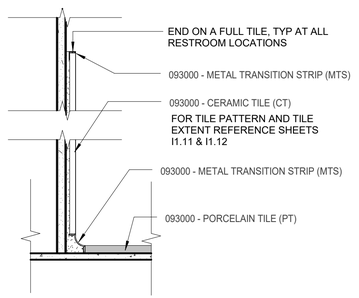

4 WALL TILE TO FLOOR TILE SECTION

3" = 1'-0"

9/15/2026 3:42:46 PM

Portland State UNIVERSITY

PSU CAPITAL PROJECTS & CONSTRUCTION

RMNC

RICHARD & MAURINE NEUBERGER CENTER

4TH FLOOR SPHR
INTERIOR REMODEL

PSU CAMPUS | BLOCK: 087
1600 SW 4TH AVENUE
PORTLAND, OREGON 97201

bassetti architects DESIGN FOR GOOD
A Design Studio of HMC Architects

This document has been digitally signed
REGISTERED ARCHITECT JOSEPH ECHEVERRI 6439 PORTLAND, OREGON STATE OF OREGON
09/17/2026 8:50:46 AM

ISSUED FOR BID & PERMIT

9/18/2026

*HALF SIZE WHEN PRINTED AT

Sheet Title : INTERIOR DETAILS

Revisions : *
Date : 9/18/2026

Drawn : BASSETTI
Checked : -

Sheet # : I5.11

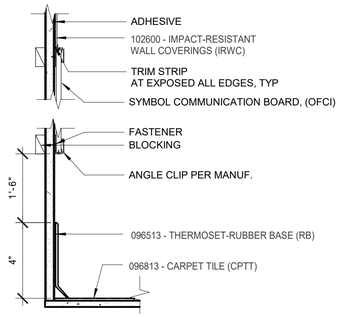

8 COMMUNICATION BOARD SECTION DETAIL
3" = 1'-0"

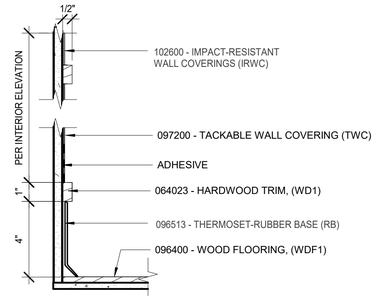

5 TWC W/ WOOD TRIM SECTION
3" = 1'-0"

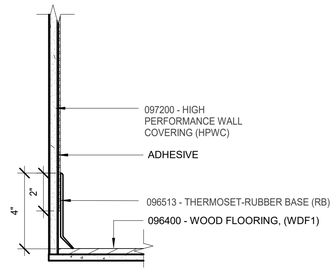

1 HPWC AT BASE
3" = 1'-0"

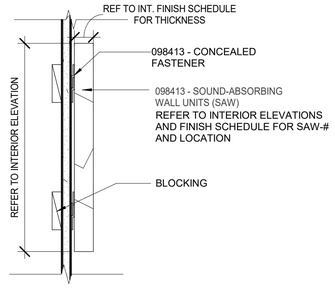

9 SOUND ABSORBING WALL UNIT (SAW) SECTION DETAIL
3" = 1'-0"

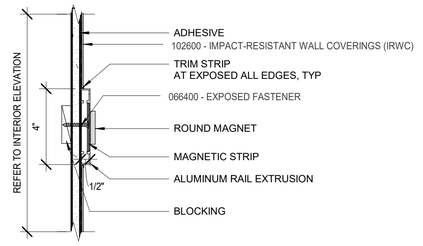

6 MAGNET RAIL SECTION
3" = 1'-0"

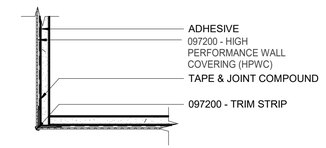

2 HPWC OUTSIDE CORNER PLAN DETAIL
3" = 1'-0"

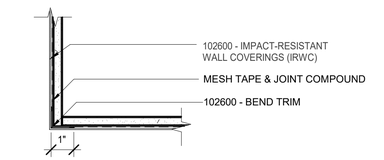

10 IMPACT RESISTANT WALL COVERING (IRWC) W/ TRIM PLAN DETAIL
3" = 1'-0"

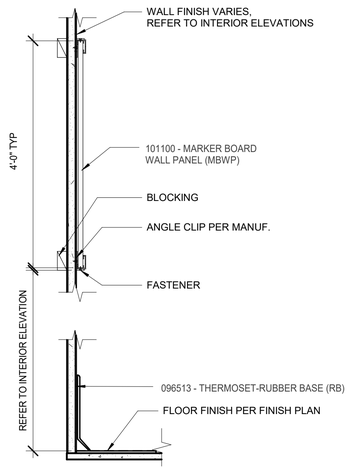

7 MBWP SECTION DETAIL
3" = 1'-0"

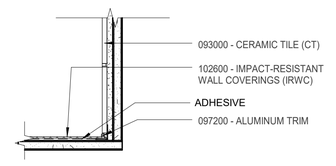

3 WALL TILE AT IRWC INSIDE CORNER PLAN DETAIL
3" = 1'-0"

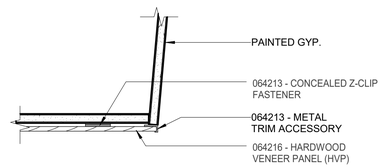

11 HARDWOOD VENEER PANEL (HVP) EDGE TRANSITION PLAN DETAIL
3" = 1'-0"

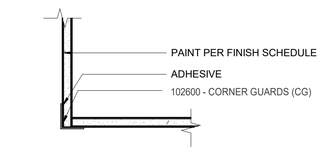

4 PAINTED WALL W/ CORNER GUARD, TYP
3" = 1'-0"

9/15/2026 3:42:46 PM

Portland State UNIVERSITY

PSU CAPITAL PROJECTS & CONSTRUCTION

RMNC
RICHARD & MAURINE NEUBERGER CENTER

4TH FLOOR SPHR
INTERIOR REMODEL

PSU CAMPUS | BLOCK: 087
1600 SW 4TH AVENUE
PORTLAND, OREGON 97201

bassetti architects DESIGN FOR GOOD
A Design Studio of HMC Architects

This document has been digitally signed

REGISTERED ARCHITECT JOSEPH ECHEVERRI 6430 PORTLAND, OREGON STATE OF OREGON

09/17/2026 8:50:46 AM

ISSUED FOR BID & PERMIT

9/18/2026

*HALF SIZE WHEN PRINTED AT

Sheet Title : INTERIOR DETAILS

Revisions : *

Date : 9/18/2026

Drawn : BASSETTI

Checked : -

Sheet # : I5.12

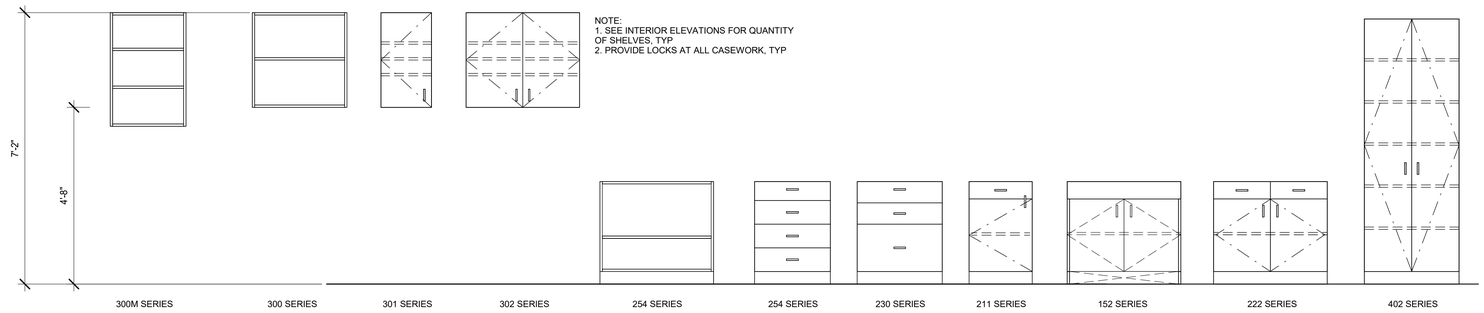

CASEWORK LEGEND

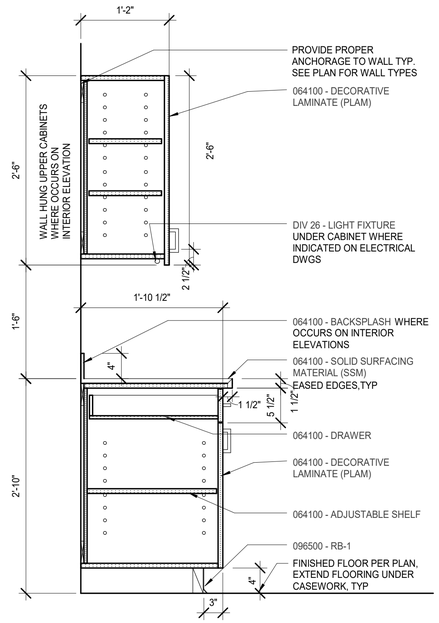

20 TYPICAL CASEWORK
1" = 1'-0"

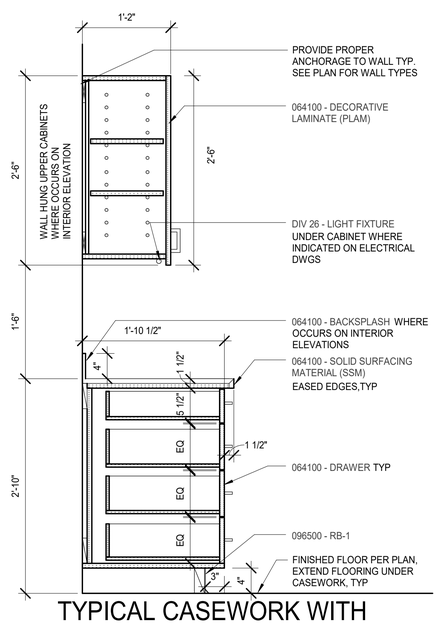

15 TYPICAL CASEWORK WITH DRAWER BASE
1" = 1'-0"

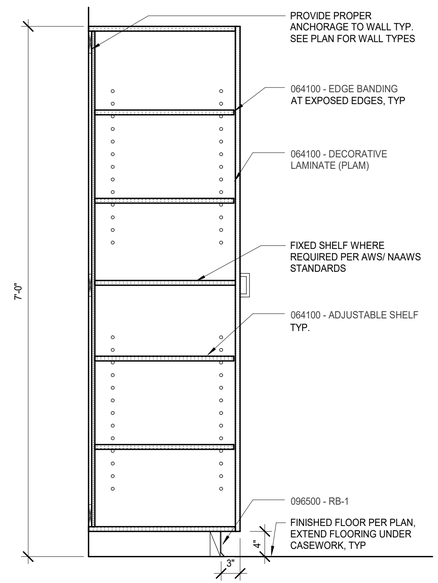

12 TALL CABINET - DOORS
1" = 1'-0"

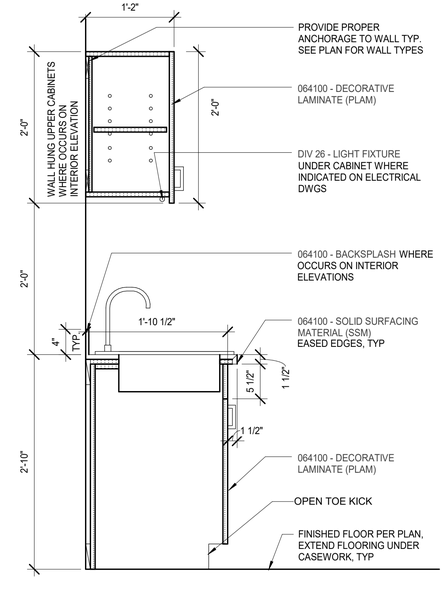

18 TYPICAL SINK CASEWORK
1" = 1'-0"

9/15/2026 3:42:47 PM

Portland State UNIVERSITY

PSU CAPITAL PROJECTS & CONSTRUCTION

RMNC
RICHARD & MAURINE NEUBERGER CENTER

4TH FLOOR SPHR
INTERIOR REMODEL

PSU CAMPUS | BLOCK: 087
1600 SW 4TH AVENUE
PORTLAND, OREGON 97201

bassetti architects DESIGN FOR GOOD
A Design Studio of HMC Architects

This document has been digitally signed

REGISTERED ARCHITECT JOSEPH ECHEVERRI 6430 PORTLAND, OREGON STATE OF OREGON

09/17/2026 8:50:46 AM

ISSUED FOR BID & PERMIT

9/18/2026

*HALF SIZE WHEN PRINTED AT

Sheet Title : CASEWORK DETAILS

Revisions : *

Date : 9/18/2026

Drawn : BASSETTI

Checked : -

Sheet # : I5.21

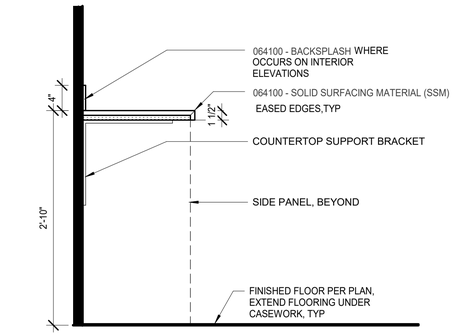

6 COUNTERTOP W/EXPOSED SUPPORTS

1" = 1'-0"

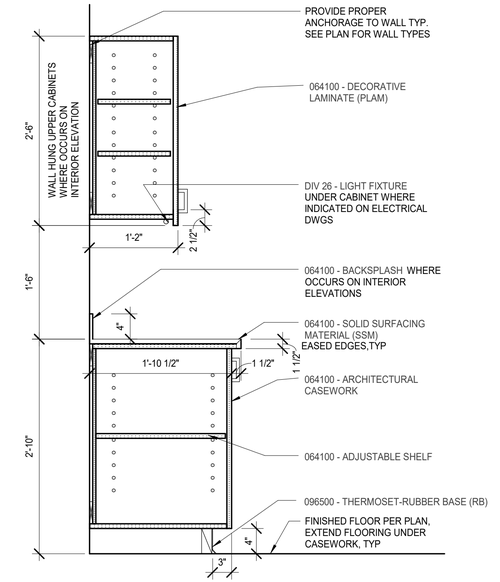

2 BASE CABINET WITH DOORS

1" = 1'-0"

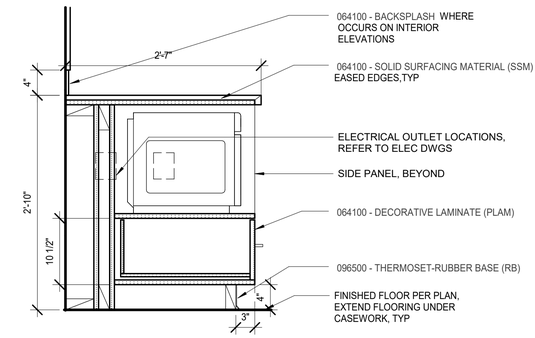

7 MICROWAVE SHELF BASE CABINET

1" = 1'-0"

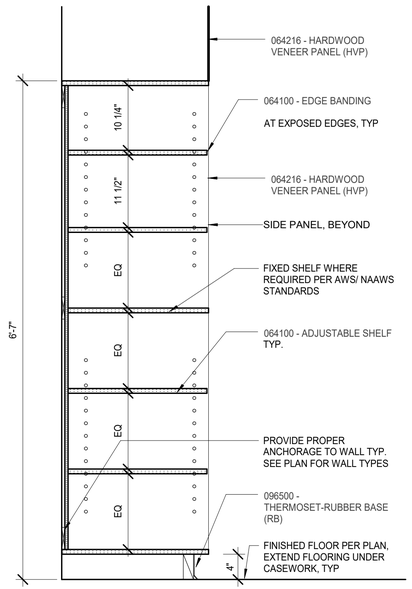

16 TALL CABINET - OPEN SHELF

1" = 1'-0"

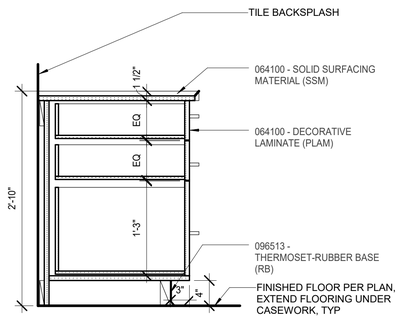

8 3 DRAWER BASE CABINET

1" = 1'-0"

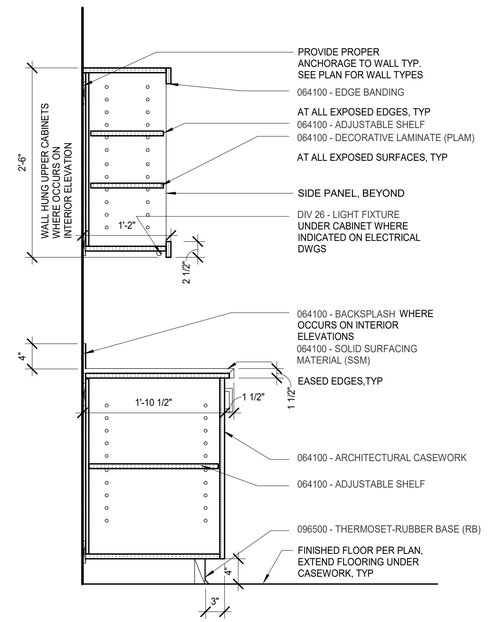

4 BASE CABINET W/OPEN SHELVES

1" = 1'-0"

Portland State UNIVERSITY

PSU CAPITAL PROJECTS & CONSTRUCTION

RMNC

RICHARD & MAURINE NEUBERGER CENTER

4TH FLOOR SPHR
INTERIOR REMODEL

PSU CAMPUS | BLOCK: 087
1600 SW 4TH AVENUE
PORTLAND, OREGON 97201

bassetti architects DESIGN FOR GOOD
A Design Studio of HMC Architects

This document has been digitally signed

REGISTERED ARCHITECT JOSEPH ECHEVERRI 6420 PORTLAND, OREGON STATE OF OREGON

09/17/2026 8:50:47 AM

ISSUED FOR BID & PERMIT

9/18/2026

*HALF SIZE WHEN PRINTED AT

Sheet Title : CASEWORK DETAILS

Revisions :	Date :
*	9/18/2026

Drawn : BASSETTI Checked : -

Sheet # : I5.22

9/15/2026 3:42:47 PM

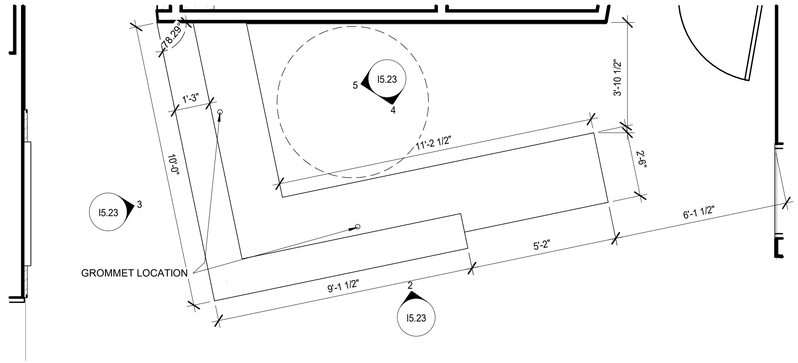

1 RECEPTION DESK - ENLARGED PLAN
3/8" = 1'-0"

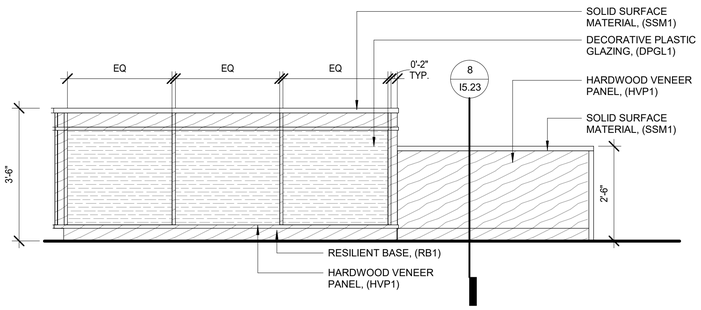

2 RECEPTION DESK - NORTH
1/2" = 1'-0"

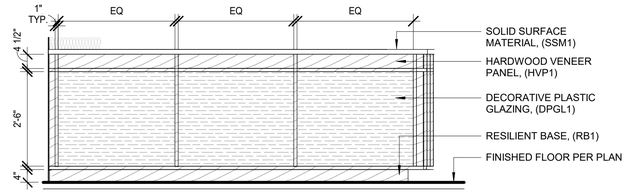

3 RECEPTION DESK - EAST
1/2" = 1'-0"

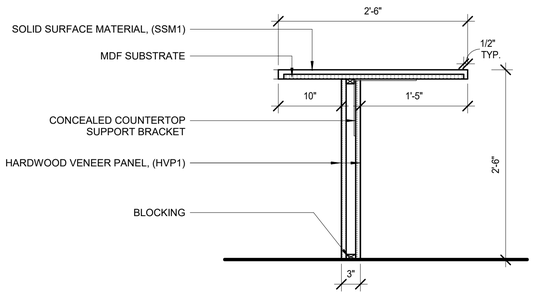

8 RECEPTION DESK ADA - SECTION
1" = 1'-0"

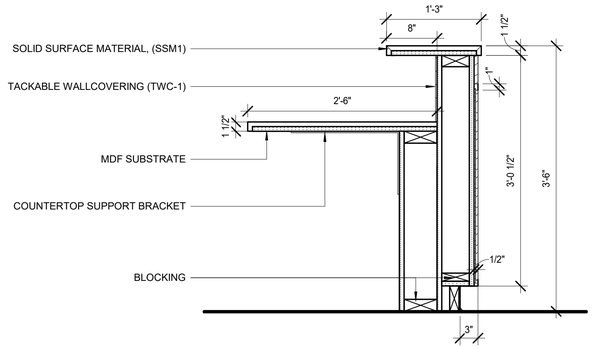

6 RECEPTION DESK - SECTION
1" = 1'-0"

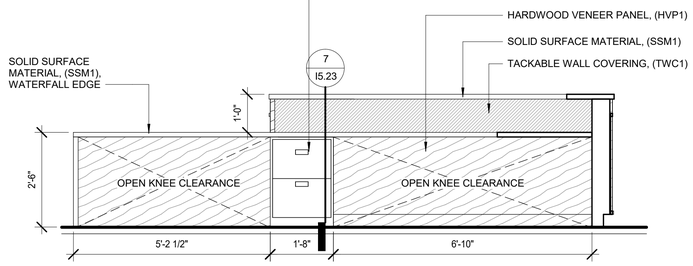

4 RECEPTION DESK - SOUTH
1/2" = 1'-0"

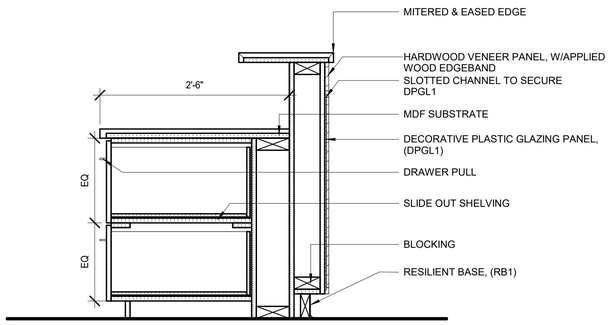

7 RECEPTION DESK FILE CABINET - SECTION
1" = 1'-0"

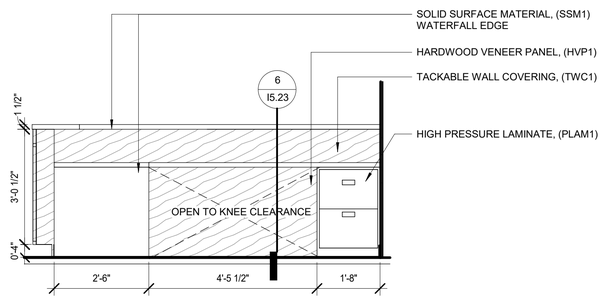

5 RECEPTION DESK - WEST
1/2" = 1'-0"

9/15/2026 3:42:48 PM

Portland State UNIVERSITY

PSU CAPITAL PROJECTS & CONSTRUCTION

RMNC
RICHARD & MAURINE NEUBERGER CENTER

4TH FLOOR SPHR
INTERIOR REMODEL

PSU CAMPUS | BLOCK: 087
1600 SW 4TH AVENUE
PORTLAND, OREGON 97201

bassetti architects DESIGN FOR GOOD
A Design Studio of HMC Architects

This document has been digitally signed
REGISTERED ARCHITECT JOSEPH ECHEVERRI 6430 PORTLAND, OREGON STATE OF OREGON
09/17/2026 8:50:47 AM

ISSUED FOR BID & PERMIT

9/18/2026
*HALF SIZE WHEN PRINTED AT

Sheet Title : RECEPTION DESK CASEWORK DETAILS

Revisions : *
Date : 9/18/2026

Drawn : BASSETTI
Checked : -

Sheet # : I5.23

KITCHEN CERAMIC TILE PATTERN (CTP3)

1/2" = 1'-0"

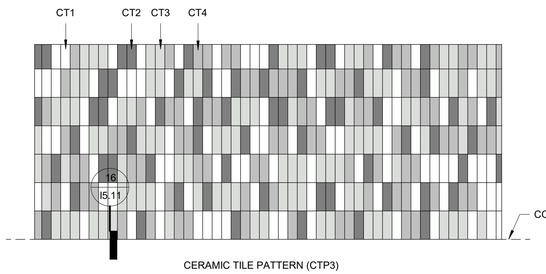

CERAMIC TILE PATTERN (CTP3)

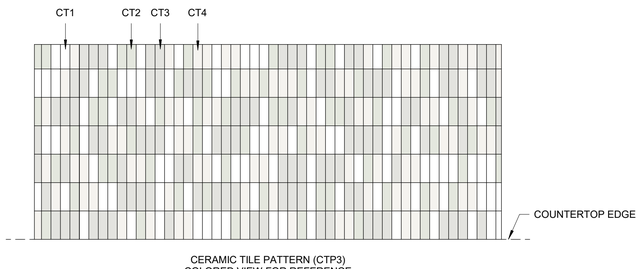

CERAMIC TILE PATTERN (CTP3)
COLORED VIEW FOR REFERENCE

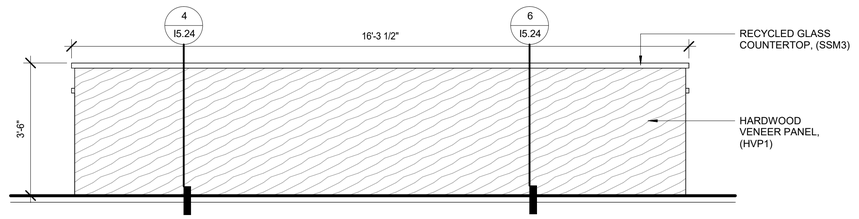

2 KITCHEN ISLAND - EAST

1/2" = 1'-0"

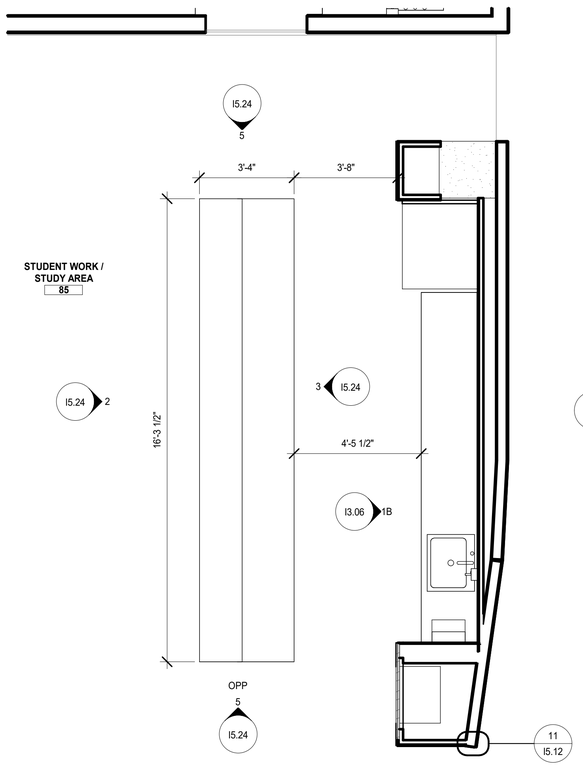

20 KITCHEN - ENLARGE PLAN

3/8" = 1'-0"

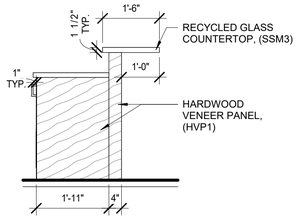

5 KITCHEN ISLAND - SOUTH

1/2" = 1'-0"

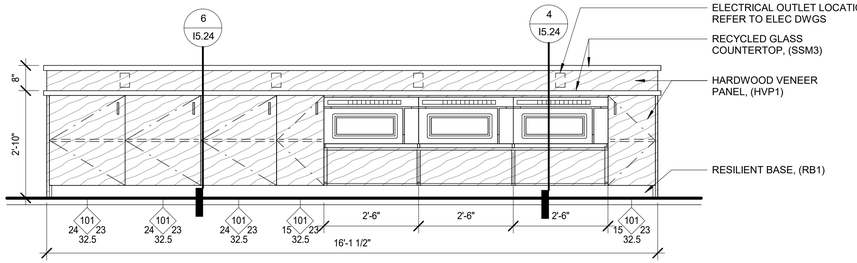

3 KITCHEN ISLAND - WEST

1/2" = 1'-0"

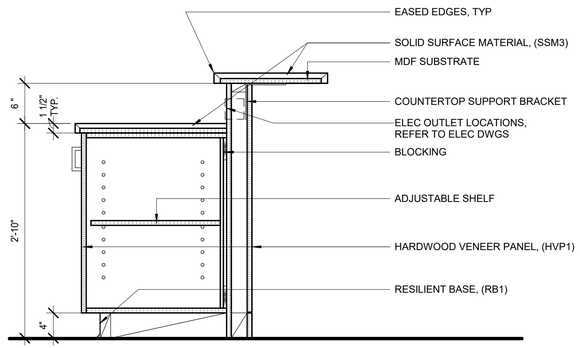

6 KITCHEN ISLAND - SECTION

1" = 1'-0"

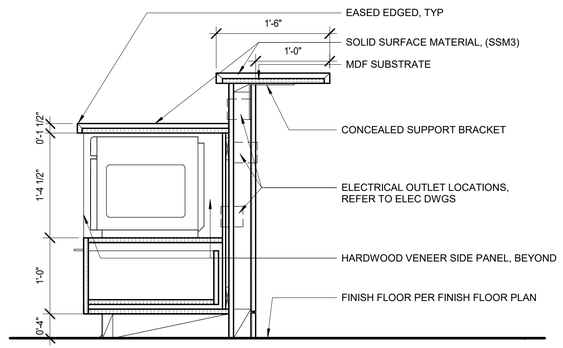

4 KITCHEN MICROWAVE STORAGE - SECTION

1" = 1'-0"

9/15/2026 3:40:42 PM

Portland State UNIVERSITY

PSU CAPITAL PROJECTS & CONSTRUCTION

RMNC

RICHARD & MAURINE NEUBERGER CENTER

4TH FLOOR SPHR
INTERIOR REMODEL

PSU CAMPUS | BLOCK: 087
1600 SW 4TH AVENUE
PORTLAND, OREGON 97201

bassetti architects DESIGN FOR GOOD
A Design Studio of HMC Architects

This document has been digitally signed

REGISTERED ARCHITECT
JOSEPH ECHEVERRI
6439
PORTLAND, OREGON
STATE OF OREGON

09/17/2026 8:50:47 AM

ISSUED FOR BID & PERMIT

9/18/2026

*HALF SIZE WHEN PRINTED AT

Sheet Title : KITCHEN CASEWORK DETAILS

Revisions :	Date :
*	9/18/2026

Drawn : BASSETTI Checked : -

Sheet # : I5.24

ROOM FINISH SCHEDULE

ROOM NUMBER	ROOM NAME	BASE	WALLS				CEILING	CASEWORK		WINDOW COVERINGS	REMARKS
			NORTH	EAST	SOUTH	WEST		VERT	HORIZ		
4XX	(E) RR All User	*CTP, MTS	CTP1, P1	CTP2, P-1	CTP2, P1	CTP2, P1	REFER TO ARCH DWGS	-	-	-	REFER TO CERAMIC TILE EXTENT PLANS FOR CERAMIC PATTERN LOCATIONS
68	CLINIC J	RB1	P2	P2	P2	P2	REFER TO ARCH DWGS	-	-	-	
70	SINK AREA	RB1	P1		P1	SEE INT. ELEV	REFER TO ARCH DWGS	-	-	-	
85	STUDENT WORK / STUDY AREA	RB1	SEE INT. ELEV	SEE INT. ELEV	SEE INT. ELEV	SEE INT. ELEV	REFER TO ARCH DWGS	*PLAM1, HVP1	SSM3	RS-M, SBM-1	REFER TO INT. ELEVATIONS AND CASEWORK DRAWINGS FOR EXACT FINISH LOCATIONS
403	MEN	*CTP, MTS	CTP2, P1	CTP2, P1	CTP2, P1	CTP2, P1	REFER TO ARCH DWGS	-	-	-	REFER TO CERAMIC TILE EXTENT PLANS FOR CERAMIC PATTERN LOCATIONS
403A	JAN. SINK	RB1	P1	P1	P1	P1	REFER TO ARCH DWGS	-	-	-	
404	WMN	*CTP, MTS	CTP2, P1	CTP2, P1	CTP2, P1	CTP2, P1	REFER TO ARCH DWGS	-	-	-	REFER TO CERAMIC TILE EXTENT PLANS FOR CERAMIC PATTERN LOCATIONS
406	TECH IT / AV / CCTV	RB1	P1	P1	P1	P1	REFER TO ARCH DWGS	-	-	-	
409	GROUP ROOM OR UNIVERSAL USE ROOM	RB1	SEE INT. ELEV	SEE INT. ELEV	SEE INT. ELEV	SEE INT. ELEV	REFER TO ARCH DWGS	-	-	RS-M, SBM-1	
411	SMALL VIEWING ROOM	RB1	SAW5	P3	P3	SAW5	REFER TO ARCH DWGS	-	-	-	
412	SMALL VIEWING ROOM	RB1	SEE INT. ELEV	SEE INT. ELEV	SEE INT. ELEV	SEE INT. ELEV	REFER TO ARCH DWGS	-	-	-	
413	SMALL VIEWING ROOM	RB1	P3	P3	SAW5	SAW5	REFER TO ARCH DWGS	-	-	-	
414	SMALL VIEWING ROOM	RB1	P3	P3	SAW5	SAW5	REFER TO ARCH DWGS	-	-	-	
416	CLINIC H	RB1	P2	P2	P2	P2	REFER TO ARCH DWGS	-	-	-	
417	CLINIC G	RB1	P2	SEE INT. ELEV	P2	P2	REFER TO ARCH DWGS	-	-	RS-M, SBM-1	
418	CLINIC F	RB1	P2	P2	P2	SEE INT. ELEV	REFER TO ARCH DWGS	-	-	RS-M, SBM-1	
419	CLINIC E	RB1	SEE INT. ELEV	SEE INT. ELEV	SEE INT. ELEV	SEE INT. ELEV	REFER TO ARCH DWGS	-	-	RS-M, SBM-1	
420	CLINIC D	RB1	P2	P2	P2	P2	REFER TO ARCH DWGS	-	-	RS-M, SBM-1	
421	CLINIC C	RB1	P2	P2	P2	P2	REFER TO ARCH DWGS	-	-	RS-M, SBM-1	
422	CLINIC B	RB1	P2	P2	P2	P2	REFER TO ARCH DWGS	-	-	RS-M, SBM-1	
423	CLINIC A	RB1	SEE INT. ELEV	SEE INT. ELEV	SEE INT. ELEV	SEE INT. ELEV	REFER TO ARCH DWGS	-	-	RS-M, SBM-1	
424	CLINIC - K AUDIOLOGY	RB1	P3	P3	P3	P3	REFER TO ARCH DWGS	-	-	-	
425	SUPPLY	RB1	SEE INT. ELEV	P1	P1	SEE INT. ELEV	REFER TO ARCH DWGS	PLAM2	SSM2	-	
426	ADMIN OFFICE	RB1	SEE INT. ELEV	SEE INT. ELEV	SEE INT. ELEV	SEE INT. ELEV	REFER TO ARCH DWGS	-	-	RS-M, SBM-1	
428	RECEPTION / LOBBY	RB1	SEE INT. ELEV	SEE INT. ELEV	SEE INT. ELEV	SEE INT. ELEV	REFER TO ARCH DWGS	*PLAM1, HVP1, DPGL1	SSM1	RS-M, SBM-1	REFER TO INT. ELEVATIONS AND CASEWORK DRAWINGS FOR EXACT FINISH LOCATIONS
430	CO RESEARCH LAB	RB1	P1	P1, MBWP1	P1	P1	REFER TO ARCH DWGS			-	
430A	TESTING	RB1	SAW6	P1	P1	SAW6	REFER TO ARCH DWGS			-	
430B	EYE TRACKER ROOM	RB1	P1	P1	SAW6	SAW6	REFER TO ARCH DWGS			-	
431	ADJUNCT OFFICES	RB1	P1	P1	P1, TB1, MBWP1	P1	REFER TO ARCH DWGS			-	
431A	VIDEO ROOM	RB1	SAW5	SAW5	P3	SAW5	REFER TO ARCH DWGS			-	
432	RESEARCH LAB 6	RB1	SEE INT. ELEV	SEE INT. ELEV	SEE INT. ELEV	SEE INT. ELEV	REFER TO ARCH DWGS			-	
433	CONFERENCE ROOM / STAFF BREAKROOM	RB1	SEE INT. ELEV	SEE INT. ELEV	SEE INT. ELEV	SEE INT. ELEV	REFER TO ARCH DWGS	PLAM2	SSM2	RS-M, SBM-1	REFER TO INT. ELEVATIONS AND CASEWORK DRAWINGS FOR EXACT FINISH LOCATIONS
434	OFFICE 16	RB1	SAW6	P1	P1	P1	REFER TO ARCH DWGS			RS-M, SBM-1	
435	OFFICE 15	RB1	SAW6	P1	P1	P1	REFER TO ARCH DWGS			RS-M, SBM-1	
436	CLINIC DIR. OFFICE 14	RB1	SAW6	P1	P1	P1	REFER TO ARCH DWGS			RS-M, SBM-1	
437	OFFICE 13	RB1	P1	P1	SAW6	P1	REFER TO ARCH DWGS			RS-M, SBM-1	
438	SMALL CONF ROOM	RB1	SEE INT. ELEV	SEE INT. ELEV	SEE INT. ELEV	SEE INT. ELEV	REFER TO ARCH DWGS			RS-M, SBM-1	
439	OFFICE 12	RB1	P1	SAW6	P1	P1	REFER TO ARCH DWGS			RS-M, SBM-1	
440	RESEARCH LAB 5	RB1	P1, MBWP1	P1, SAW6	P1	P1	REFER TO ARCH DWGS			-	
441	OFFICE 11	RB1		SAW6	P1	P1	REFER TO ARCH DWGS			RS-M, SBM-1	
442	RESEARCH LAB 4	RB1	P1, MBWP1	P1, SAW6	P1	P1	REFER TO ARCH DWGS			-	
443	OFFICE 10	RB1	P1	SAW6	P1	P1	REFER TO ARCH DWGS			RS-M, SBM-1	
444	RESEARCH LAB 3	RB1	P1, MBWP1	P1, SAW6	P1	P1	REFER TO ARCH DWGS			-	
445	OFFICE 9	RB1	P1	SAW6	P1	P1	REFER TO ARCH DWGS			RS-M, SBM-1	
446	RESEARCH LAB 2	RB1	P1, MBWP1	P1, SAW6	P1	P1	REFER TO ARCH DWGS			-	
447	OFFICE 8	RB1	P1	SAW6	P1	P1	REFER TO ARCH DWGS			RS-M, SBM-1	
448	OFFICE 7	RB1	P1	SAW6	P1	P1	REFER TO ARCH DWGS			RS-M, SBM-1	
449	OFFICE 6 - DIRECTOR	RB1	SEE INT. ELEV	SEE INT. ELEV	SEE INT. ELEV	SEE INT. ELEV	REFER TO ARCH DWGS			RS-M, SBM-1	
450	OFFICE 5	RB1	P1	P1	SAW6	P1	REFER TO ARCH DWGS			RS-M, SBM-1	
451	OFFICE 4	RB1	SAW6	P1	P1	P1	REFER TO ARCH DWGS			RS-M, SBM-1	
452	OFFICE 3	RB1	SAW6	P1	P1	P1	REFER TO ARCH DWGS			RS-M, SBM-1	
453	OFFICE 2	RB1	SAW6	P1	P1	P1	REFER TO ARCH DWGS			RS-M, SBM-1	
454	OFFICE 1	RB1	SEE INT. ELEV	SEE INT. ELEV	SEE INT. ELEV	SEE INT. ELEV	REFER TO ARCH DWGS			RS-M, SBM-1	
455a	ZOOM RM	RB1	SAW5	SAW5	SAW5	P3	REFER TO ARCH DWGS			-	
455b	ZOOM RM	RB1	SAW5	SAW5	SAW5	P3	REFER TO ARCH DWGS			-	
456	RESEARCH LAB 1	RB1	SEE INT. ELEV	SEE INT. ELEV	SEE INT. ELEV	SEE INT. ELEV	REFER TO ARCH DWGS			-	
457	TOILET	CTP, MTS	CTP2, P1	CTP2, P1	CTP2, P1	CTP1,P1	REFER TO ARCH DWGS			-	REFER TO CERAMIC TILE EXTENT PLANS FOR CERAMIC PATTERN LOCATIONS
458	TOILET	CTP, MTS	CTP2, P1	CTP2, P1	CTP2, P1	CTP1,P1	REFER TO ARCH DWGS			-	REFER TO CERAMIC TILE EXTENT PLANS FOR CERAMIC PATTERN LOCATIONS
461	MEETING / STUDY	RB1	HPWC3	HPWC3	HPWC3, MBWP1	-	REFER TO ARCH DWGS			RS-M, SBM-1	
463	PREP/SECURE	RB1	P3	P3	P3	P3	REFER TO ARCH DWGS			RS-M, SBM-1	
464	TOY WORKROOM	RB1	SEE INT. ELEV	SEE INT. ELEV	SEE INT. ELEV	SEE INT. ELEV	REFER TO ARCH DWGS	PLAM1	SSM2	-	
465	GRAD SEMINAR ROOM 1	RB1	P1	SAW5	P1, MBWP1	P1	REFER TO ARCH DWGS			RS-M, SBM-1	
466	GRAD SEMINAR ROOM 2	RB1	SEE INT. ELEV	SEE INT. ELEV	SEE INT. ELEV	SEE INT. ELEV	REFER TO ARCH DWGS			RS-M, SBM-1	
467	STUDENT VIEWING ROOM	RB1	SEE INT. ELEV	SEE INT. ELEV	SEE INT. ELEV	SEE INT. ELEV	REFER TO ARCH DWGS			RS-M, SBM-1	
468	STOR CLOSET	RB1	P1	P1	P1	P1	REFER TO ARCH DWGS			-	
C411	CORRIDOR	RB1	SEE INT. ELEV	SEE INT. ELEV	SEE INT. ELEV	SEE INT. ELEV	REFER TO ARCH DWGS	PLAM2	SSM2	-	
C415	SINK ALCOVE	RB1	P1	SEE INT. ELEV	SEE INT. ELEV	SEE INT. ELEV	REFER TO ARCH DWGS	PLAM2	SSM2	-	
C424	CORRIDOR	RB1	SEE INT. ELEV	SEE INT. ELEV	SEE INT. ELEV	SEE INT. ELEV	REFER TO ARCH DWGS			-	
L400	ELEVATOR LOBBY	RB1	P1, (E) WOOD PANELING	-	P1, (E) WOOD PANELING	-	REFER TO ARCH DWGS			-	PROTECT EXISTING WOOD PANELING IN PLACE

9/15/2026 3:42:49 PM

Portland State UNIVERSITY

PSU CAPITAL PROJECTS & CONSTRUCTION

RMNC
RICHARD & MAURINE NEUBERGER CENTER

4TH FLOOR SPHR
INTERIOR REMODEL

PSU CAMPUS | BLOCK: 087
1600 SW 4TH AVENUE
PORTLAND, OREGON 97201

bassetti architects DESIGN FOR GOOD
A Design Studio of HMC Architects

This document has been digitally signed
REGISTERED ARCHITECT JOSEPH ECHEVERRI 6439 PORTLAND, OREGON STATE OF OREGON
09/17/2026 8:50:47 AM

ISSUED FOR BID & PERMIT

9/18/2026

*HALF SIZE WHEN PRINTED AT

Sheet Title : ROOM FINISH SCHEDULE

Revisions : *

Date : 9/18/2026

Drawn : BASSETTI

Checked : Checker

Sheet # : I6.01

ARCHITECTURAL WOOD CASEWORK

TAG	MANUFACTURER	COLOR NAME	COLOR #	FINISH	NOTE
PLAM1	NEVAMAR	FOUNDRY	S2084	TEXTURED/SUEDE (SD)	VERTICAL GRADE
PLAM2	NEVAMAR	HARMONY MINT	AV4000	TEXTURAL	VERTICAL GRADE

FLUSH WOOD PANELING

TAG	MANUFACTURER	COLLECTION	CORE	SPECIES	THICKNESS	NOTE
HVP1	FORMOLOGY	CROSSCORE SURFACE	PLYWOOD	WHITE OAK VENEER	3/4"	
WD1	FORMOLOGY	CROSSCORE	WHITE OAK	-	PER DRAWINGS	HARDWOOD TRIM

DECORATIVE PLASTIC GLAZING

TAG	MANUFACTURER	COLLECTION	COLOR/PATTERN	FINISH	BACK FINISH	THICKNESS	PATTERN DIRECTION	NOTES
DPGL1	3FORM	VARIA	HERBARIUM	SMOOTH, TRANSPARENT	-	3/8"	PARALLELTO LONG SIDE	
DPGL2	3FORM	CHROMA	RAINFOREST G35	SMOOTH	AVALANCHE	1/2"	PARALLELTO LONG SIDE	
DPGL3	3FORM	CHROMA	PEAR G18	SMOOTH	AVALANCHE	1/2"	PARALLELTO LONG SIDE	
DPGL4	3FORM	CHROMA	TOASTED N09	SMOOTH	AVALANCHE	1/2"	PARALLELTO LONG SIDE	
DPGL5	3FORM	CHROMA	MINNOW G30	SMOOTH	AVALANCHE	1/2"	PARALLELTO LONG SIDE	

TILING

TAG	MANUFACTURER	APPLICATION	COLLECTION	COLOR NAME	COLOR #	FINISH	SIZE	JOINT WIDTH	GROUT	NOTE
CT1	FIRE CLAY	WALL	NATURAL PRESS	SALT CREEK	TT.NP.OOO.A19.G103.QS	GLOSS	3X9	3/16"	GT-1	QUICK SHIP
CT2	FIRE CLAY	WALL	NATURAL PRESS	MANZANITA	TT.NP.OOO.A19.G097.QS	GLOSS	3X9	3/16"	GT-1	QUICK SHIP
CT3	FIRE CLAY	WALL	NATURAL PRESS	PUGET SOUND	TT.NP.OOO.A19.G102.QS	GLOSS	3X9	3/16"	GT-1	QUICK SHIP
CT4	FIRE CLAY	WALL	NATURAL PRESS	PEARL	TT.NP.OOO.A19.G101.QS	GLOSS	3X9	3/16"	GT-1	QUICK SHIP
CT5	CROSSVILLE	WALL	SWATCHES	COTTON	NEC01	SATIN	3X12	1/16"	GT-1	
PT1	CROSSVILLE	FLOOR	CIVILIZATION	COMMUNIQUE	CIV01.11224SPO	UNPOLISHED	24X24	1/8"	GT-1	
GT1	LATICRETE	WALL	SPECTRALOCK PRO	SMOKE GREY	89	-	-	-	-	

WOOD FLOORING

TAG	MANUFACTURER	COLOR NAME	COLOR #	FINISH	NOTE
WDF1	ZENA EDGE GRAIN	OREGON WHITE OAK	-	PALLMANN MAGIC OIL	

RESILIENT FLOORING

TAG	MANUFACTURER	TYPE	COLLECTION	STYLE	COLOR NAME	COLOR #	FINISH	SIZE	GUAGE	NOTE
RFT1	SHAW CONTRACT	PVC FREE TILE	INNATE	0895V	FLAX	95114	EXOGUARD+	13X26	2.5MM	DIRECT GLUE INSTALLATION

RESILIENT BASE & ACCESSORIES

TAG	MANUFACTURER	TYPE	COLOR NAME	COLOR #	HEIGHT	NOTE
RB1	JOHNSONITE	THERMOSET RUBBER WALL BASE	STONE COTTAGE	VN2	4"	

9/15/2026 3:42:49 PM

Portland State UNIVERSITY

PSU CAPITAL PROJECTS & CONSTRUCTION

RMNC
RICHARD & MAURINE NEUBERGER CENTER

4TH FLOOR SPHR
INTERIOR REMODEL

PSU CAMPUS | BLOCK: 087
1600 SW 4TH AVENUE
PORTLAND, OREGON 97201

bassetti architects DESIGN FOR GOOD
A Design Studio of HMC Architects

This document has been digitally signed



09/17/2026 8:50:47 AM

ISSUED FOR BID & PERMIT

9/18/2026

*HALF SIZE WHEN PRINTED AT

Sheet Title : FINISH SCHEDULE

Revisions : *

Date : 9/18/2026

Drawn : BASSETTI

Checked : -

Sheet # : I6.11

WALL COVERINGS

TAG	MANUFACTURER	COLLECTION / PRODUCT	COLOR	COLOR #	NOTE
HPWC1	WOLF GORDON	CLAIR PVC-FREE / ODISHA	SPRING	ODH 9296	
HPWC2	WOLF GORDON	CLAIR PVC-FREE / CASTINE	OLIVE	CST 9054	
HPWC3	WOLF GORDON	CLAIR PVC-FREE / CASTINE	PEARL	CST 9049	
TWC1	DESIGNTEX	WANNABE STRIPE	MUSHROOM	8630-109	STRAIGHT HANG, RANDOM MATCH

TILE CARPETING

TAG	MANUFACTURER	COLLECTION	STYLE	COLOR NAME	PRODUCT #	SIZE	BACKING	INSTALL DIRECTION	NOTE
CPTT1	INTERFACE	OPEN AIR	404 NEUTRALS	NICKEL	106750	19.69"X19.69"	CQUEST BIO	NON DIRECTIONAL	
CPTT2	INTERFACE	OPEN AIR	404 ACCENT	MOSS	107137	9.845"X39.38"	CQUEST BIO	NON DIRECTIONAL	
CPTT3	INTERFACE	OPEN AIR	404 TRANSITION	NICKEL/MOSS	107121	9.845"X39.38"	CQUEST BIO	NON DIRECTIONAL	
TCF1	J+J FLOORING	KINETEX	UME	DRIFT	3840	24"X24"	KINETEX FELT CUSHION	NON DIRECTIONAL	

SOUND-ABSORBING WALL PANELS

TAG	MANUFACTURER	TYPE	MATERIAL	COLLECTION	INSTALLATION	COLOR	PANEL SIZE	THICKNESS	NOTE
SAW1	ACOUFELT	12/24 MM	POLYESTER FELT	PREMIER, WALL PANEL	CONCEALED FASTENER	PISTACHIO	REFER TO DWGS	24MM	
SAW2	ACOUFELT	12/24 MM	POLYESTER FELT	PREMIER, WALL PANEL	CONCEALED FASTENER	NORI	REFER TO DWGS	24MM	
SAW3	ACOUFELT	12/24 MM	POLYESTER FELT	PREMIER, WALL PANEL	CONCEALED FASTENER	EUCALYPTUS	REFER TO DWGS	24MM	
SAW4	ACOUFELT	12/24 MM	POLYESTER FELT	PREMIER, WALL PANEL	CONCEALED FASTENER	MUSHROOM	REFER TO DWGS	24MM	
SAW5	ACOUFELT	12MM	POLYESTER FELT	FRACTURE, INTERSECT	CONCEALED FASTENER	PISTACHIO	REFER TO DWGS	12MM	
SAW6	ACOUFELT	12MM	POLYESTER FELT	FRACTURE, PENNANT	CONCEALED FASTENER	MUSHROOM	REFER TO DWGS	12MM	

PAINTING

TAG	MANUFACTURER	COLOR NAME	COLOR #	NOTE
P1	SHERWIN WILLIAMS	BIG CHILL	SW7648	
P2	SHERWIN WILLIAMS	RECYCLED GLASS	SW7747	
P3	SHERWIN WILLIAMS	WILLOW TREES	SW7741	
P4	SHERWIN WILLIAMS	ROCK GARDEN	SW6195	
P5	SHERWIN WILLIAMS	GAUNTLET GRAY	SW7019	

VISUAL DISPLAY UNITS

TAG	MANUFACTURER	COLLECTION	COLOR	SIZE	NOTES
MBWP1	PLATINUM VISUAL SOLUTIONS	WRITANIUM PORCELAIN MARKERBOARD	WHITE	REFER TO ELEV.	DROP-IN TRAY SYSTEM W/ 3/4" ALUMINIUM FACE TRIM
TB1	CLARIDGE	GRAIN TACKBOARD	DARK PEARL	REFER TO ELEV.	NATURAL OAK FINISH TRIM

WALL AND DOOR PROTECTION

TAG	MANUFACTURER	COLLECTION	COLOR NAME	COLOR #	SIZE & THICKNESS	NOTE
IRWC1	WOLF GORDON	PVC FREE RAMPART RESOLVE, ANDES	ARCTIC	ADS 5913	52" WIDTH	REVERSE HAND, RANDOM MATCH, INCLUDE BEND CORNER TRIM, 1" WING SIZE IN CLEAR SATIN ANODIZED
CG1	CONSTRUCTION SPECIALTIES	CO SERIES	POWDER COAT	MATCH ADJACENT PAINT COLOR	1" WINGS, HEIGHT PER DRAWINGS	ADHESIVE APPLIED

ROLLER WINDOW SHADES

TAG	MANUFACTURER	SYSTEM	FASCIA COLOR	FABRIC STYLE	SERIES	FABRIC OPENNESS	FABRIC COLOR NAME & NUMBER	NOTE
SBM1	MECHO	URBAN SHADES	TBD	SoHo ELEVATE	1680	3%	LIGHT GREY	

COUNTERTOPS

TAG	MANUFACTURER	TYPE	COLLECTION	COLOR NAME	FINISH	NOTE
SSM1	DEKTON	SOLID SURFACE	KRAFTIZEN	ALBARIUM22	-	RECEPTION DESK
SSM2	WILSONART SOLID SURFACE	SOLID SURFACE	-	CALMING WAVES	-	CORRIDOR COUNTERTOPS AND CONFERENCE COUNTERTOP
SSM3	GILASI	RECYCLED GLASS	-	GUSCIO	-	STUDENT LOUNGE KITCHEN

9/15/2026 3:42:50 PM

Portland State UNIVERSITY

PSU CAPITAL PROJECTS & CONSTRUCTION

RMNC
RICHARD & MAURINE NEUBERGER CENTER

4TH FLOOR SPHR
INTERIOR REMODEL

PSU CAMPUS | BLOCK: 087
1600 SW 4TH AVENUE
PORTLAND, OREGON 97201

bassetti architects DESIGN FOR GOOD
A Design Studio of HMC Architects

This document has been digitally signed

REGISTERED ARCHITECT
JOSEPH ECHEVERRI
6430
PORTLAND, OREGON
STATE OF OREGON

09/17/2026 8:50:47 AM

ISSUED FOR BID & PERMIT

9/18/2026

*HALF SIZE WHEN PRINTED AT

Sheet Title : FINISH SCHEDULE

Revisions : *

Date : 9/18/2026

Drawn : BASSETTI

Checked : -

Sheet # : I6.12

GENERAL STRUCTURAL NOTES

STRUCTURAL DRAWINGS ARE A PORTION OF THE CONTRACT DOCUMENTS AND ARE INTENDED TO BE USED WITH ARCHITECTURAL, MECHANICAL, AND ELECTRICAL DRAWINGS. THE CONTRACTOR IS RESPONSIBLE FOR COORDINATING THE REQUIREMENTS FROM THESE DRAWINGS INTO THEIR SHOP DRAWINGS AND WORK.

NOTES AND DETAILS ON THE STRUCTURAL DRAWINGS SHALL TAKE PRECEDENCE OVER THE GENERAL NOTES AND TYPICAL DETAILS. WHERE NO DETAILS ARE GIVEN, CONSTRUCTION SHALL BE AS SHOWN FOR SIMILAR WORK.

CODE REQUIREMENTS:
CONFORM TO THE OSSC 2025 BUILDING CODE AS AMENDED AND ADOPTED BY THE STATE OF OREGON, ACI 318-19 AND ASCE 7-22.

TEMPORARY CONDITIONS:
THE STRUCTURE IS DESIGNED TO FUNCTION AS A UNIT UPON COMPLETION. THE CONTRACTOR IS RESPONSIBLE FOR FURNISHING ALL TEMPORARY BRACING AND/OR SUPPORT THAT MAY BE REQUIRED AS THE RESULT OF THE CONTRACTOR'S CONSTRUCTION METHODS AND/OR SEQUENCES.

DESIGN CRITERIA:
DESIGN WAS BASED ON THE STRENGTH AND DEFLECTION CRITERIA OF THE OSSC 2022. IN ADDITION TO THE DEAD LOADS, THE FOLLOWING LIVE LOADS WERE USED FOR DESIGN:

FLOOR 50 PSF
LOBBIES AND CORRIDORS 100 PSF

GEOTECHNICAL CRITERIA
ALLOWABLE SOIL BEARING PRESSURE 1500 PSF

SEISMIC CRITERIA
EARTHQUAKE DESIGN WAS BASED UPON THE FOLLOWING PER THE IBC
OCCUPANCY CATEGORY II
SEISMIC DESIGN CATEGORY D
IMPORTANCE FACTOR Ie = 1
DESIGN SPECTRAL ACCELERATIONS S_{DS}= 0.77

WIND
97MPH BASIC WIND SPEED (3-SECOND GUST)-EXPOSURE C

SUBMITTALS

ITEM	SUBMITTAL	DEFERRED SUBMITTAL
CONCRETE ANCHORAGES	X	
LIGHT GAUGE METAL FRAMING	X	
STRUCTURAL STEEL	X	

FOOTNOTES

1. SHOP DRAWINGS SHALL BE SUBMITTED TO THE ARCHITECT PRIOR TO FABRICATION AND CONSTRUCTION OF STRUCTURAL ITEMS. IF THE SHOP DRAWINGS DIFFER FROM OR ADD TO THE DESIGN OF THE STRUCTURAL DRAWINGS, THEY SHALL BEAR THE SEAL AND SIGNATURE OF A STRUCTURAL ENGINEER REGISTERED IN THE STATE OF OREGON. ANY CHANGES TO THE STRUCTURAL DRAWINGS SHALL BE SUBMITTED TO THE ARCHITECT AND ARE SUBJECT TO REVIEW AND ACCEPTANCE OF THE STRUCTURAL ENGINEER.

2. DESIGN DRAWINGS, SHOP DRAWINGS, AND CALCULATIONS FOR THE DESIGN AND FABRICATION OF ITEMS THAT ARE DESIGNED BY OTHERS SHALL BEAR THE SEAL AND SIGNATURE OF A STRUCTURAL ENGINEER REGISTERED IN THE STATE OF OREGON, AND SHALL BE SUBMITTED TO THE ARCHITECT PRIOR TO FABRICATION. CALCULATIONS SHALL BE INCLUDED FOR ALL CONNECTIONS TO THE STRUCTURE, CONSIDERING LOCALIZED EFFECTS ON STRUCTURAL ELEMENTS INDUCED BY THE CONNECTION LOADS. DESIGN SHALL BE BASED ON THE REQUIREMENTS OF OSSC AND AS NOTED UNDER "DESIGN CRITERIA".

CONCRETE ACCESSORIES:
EXPANSION BOLTS SHALL BE HILTI KWIK BOLT TZ2, SIMPSON STRONG-BOLT, OR APPROVED WITH EQUIVALENT ICC ALLOWABLE TENSION AND SHEAR VALUES. EXPANSION BOLTS SHALL BE INSTALLED IN STRICT CONFORMANCE WITH MANUFACTURER'S RECOMMENDATIONS. DO NOT CUT REINFORCING IN NEW OR EXISTING CONCRETE DURING INSTALLATION.

EPOXY ADHESIVE SHALL BE HILTI HIT-RE-500 SD OR APPROVED WITH EQUIVALENT ICC ALLOWABLE TENSION AND SHEAR VALUES. EPOXY ADHESIVE SHALL BE INSTALLED IN STRICT CONFORMANCE WITH MANUFACTURER'S RECOMMENDATIONS. DO NOT CUT REINFORCING IN NEW OR EXISTING CONCRETE DURING INSTALLATION.

PERMANENTLY EXPOSED EMBEDDED PLATES AND ANGLES SHALL BE HOT-DIPPED, GALVANIZED AFTER FABRICATION, UNLESS OTHERWISE NOTED. NO LOADS OR WELDS SHALL BE PLACED ON EMBEDDED PLATES OR ANGLES FOR A MINIMUM OF 7 DAYS AFTER CASTING.

LIGHT GAUGE METAL FRAMING:

METAL STUDS SHALL BE C-STUDS WITH A MINIMUM YIELD STRENGTH OF 33,000 PSI FOR 33 AND 43 MIL AND 50,000 PSI FOR 54, 68 AND 97 MIL THICKNESSES. GAUGE PLATE AND STRAPS SHALL HAVE A MINIMUM YIELD STRENGTH OF 30,000 PSI FOR 33 AND 43 MIL AND 50,000 PSI FOR 54, 68 AND 97 MIL THICKNESSES. LIGHT GAUGE FRAMING SHALL BE OF THE SIZE, GAUGE, AND SPACING SHOWN ON THE DRAWINGS. ALL LIGHT GAUGE FRAMING EXPOSED TO WEATHER SHALL BE GALVANIZED WITH A G90 COATING. EXPOSED TO WEATHER INCLUDES ALL FRAMING OUTSIDE BUILDING WATERPROOFING ENVELOPE.

AN AMERICAN IRON AND STEEL INSTITUTE AND STEEL STUD MANUFACTURES ASSOCIATION (SSMA) STANDARDS ARE USED IN THIS PACKAGE. PRODUCTS USED SHALL MEET OR EXCEED AISI STANDARDS AND ARE DESIGNATED BY:

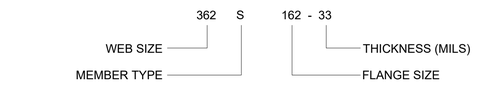

PROVIDE BRIDGING ADEQUATE TO DEVELOP THE FULL MOMENT CAPACITY OF STUDS IN CONFORMANCE WITH THE STEEL STUD MANUFACTURERS ASSOCIATION'S (SSMA) RECOMMENDATIONS. ALL FIELD CUTTING OF STUDS MUST BE BY SAWING, SHEARING, OR PLASMA CUTTING. OTHER CUTTING METHODS OF COLDFORMED MEMBERS ARE UNACCEPTABLE. NO NOTCHING OR COPING OF STUDS IS ALLOWED, UNLESS NOTED OTHERWISE. ENDS OF STUDS MI=UST SEAT FIRMLY IN RUNNER TRACK TO PROVIDE FULL STUD BEARING. SPLICING OF WALL STUDS OR HEADERS IS NOT ALLOWED, UNLESS NOTED OTHERWISE. CONTRACTOR SHALL ENSURE PUNCH OUT ALIGNMENT WHEN ASSEMBLING LATERAL BRACING AND FIELD CUTTING STUDS TO LENGTH. ALL HEADERS/BUILT-UP BEAMS SHALL BE CONSTRUCTED WITH UNPUNCHED MATERIAL ONLY.

LIGHT GAUGE FRAMING CONNECTIONS SHALL BE AS FOLLOWS

LIGHT GAUGE METAL FRAMING CONNECTIONS	
FASTENER	PRODUCT
SCREWS	ELCO DRIL-FLEX OR HILTI KWIK-FLEX (ESR-3332)
PAF'S	HILTI X-U (ESR-2269)

1. FOR SCREWS, PROVIDE 3/4" MINIMUM CLEARANCE FROM ALL EDGES AND 3/4" MINIMUM CENTER TO CENTER SPACING.
2. WELDING SHALL CONFORM WITH AWS D1.3.

STRUCTURAL STEEL
STRUCTURAL STEEL SHALL BE:

ASTM A36 (FY= 36 ksi)	CHANNELS, PLATES AND ANGLES, EXCEPT AS NOTED.
ASTM A500, GRADE B (FY = 46 ksi)	HOLLOW STRUCTURAL SECTIONS (TUBES)
ASTM A53, GRADE B (FY=35 ksi)	PIPES

DESIGN, FABRICATION, AND ERECTION SHALL BE IN ACCORDANCE WITH THE "AISC SPECIFICATION FOR THE DESIGN, FABRICATION, AND ERECTION OF STRUCTURAL STEEL FOR BUILDINGS" WITH "COMMENTARY" AND THE "CODE OF STANDARD PRACTICE".

BOLTS SHALL CONFORM TO THE ASTM AND RCSC SPECIFICATIONS FOR JOINTS USING A325M OR A490M HIGH STRENGTH BOLTS. BOLTS SHALL BE SNUG-TIGHT UNLESS NOTED OTHERWISE.

SPECIAL INSPECTION

SPECIAL INSPECTION WILL BE PROVIDED BY THE OWNER BASED ON THE REQUIREMENTS.

SPECIAL INSPECTION PROGRAM

ITEM	CONTINUOUS	PERIODIC	COMMENTS
CONCRETE			
ANCHOR BOLTS & INSERTS		X	
EPOXY ANCHOR PLACEMENT		X	
EXPANSION ANCHOR PLACEMENT		X	
STRUCTURAL STEEL			
SHOP & FIELD WELDING			
SINGLE PASS FILLET WELDS ≤ 5/16"		X	

SPECIAL INSPECTION PROGRAM FOOTNOTES:

1. PROVIDE SPECIAL INSPECTION, SPECIAL TESTING, REPORTING AND COMPLIANCE PROCEDURES ACCORDING TO CHAPTER 17 OF THE OSSC 2025 BUILDING CODE WITH THE OREGON STATE AMENDMENTS.

2. DUTIES OF THE SPECIAL INSPECTOR INCLUDE, BUT ARE NOT LIMITED TO:
   A. OBSERVE THE WORK FOR CONFORMANCE WITH THE APPROVED PERMIT DRAWINGS AND SPECIFICATIONS. BRING DISCREPANCIES TO THE IMMEDIATE ATTENTION OF THE GENERAL CONTRACTOR FOR CORRECTION, THEN, IF UNCORRECTED, TO THE ENGINEER AND THE BUILDING OFFICIAL.
   B. FURNISH INSPECTION REPORTS FOR EACH INSPECTION TO THE BUILDING OFFICIAL, ARCHITECT, ENGINEER, GENERAL CONTRACTOR AND OWNER IN A TIMELY MANNER.
   C. SUBMIT A FINAL REPORT STATING WHETHER THE WORK REQUIRING SPECIAL INSPECTION WAS INSPECTED, AND WHETHER THE WORK IS IN CONFORMANCE WITH THE APPROVED PERMIT DRAWINGS AND SPECIFICATIONS.

3. DUTIES OF THE GENERAL CONTRACTOR INCLUDE, BUT ARE NOT LIMITED TO:
   A. NOTIFY SPECIAL INSPECTOR THAT WORK IS READY FOR INSPECTION AT LEAST 24 HOURS BEFORE INSPECTION IS REQUIRED.
   B. MAINTAIN ACCESS TO WORK REQUIRING SPECIAL INSPECTION UNTIL IT HAS BEEN OBSERVED AND INDICATED TO BE IN CONFORMANCE BY THE SPECIAL INSPECTOR AND APPROVED BY THE BUILDING OFFICIAL.
   C. PROVIDE THE SPECIAL INSPECTOR WITH ACCESS TO APPROVED PERMIT DRAWINGS AND SPECIFICATIONS AT THE JOB SITE.
   D. MAINTAIN JOB-SITE COPIES OF ALL REPORTS SUBMITTED BY THE SPECIAL INSPECTOR.

4. DEFINITIONS:
   A. CONTINUOUS INSPECTION: THE SPECIAL INSPECTOR IS OBSERVING THE WORK REQUIRING SPECIAL INSPECTION AT ALL TIMES.
   B. PERIODIC INSPECTION: THE SPECIAL INSPECTOR IS ON SITE AS REQUIRED TO CONFORM THAT THE WORK REQUIRING SPECIAL INSPECTION IS IN CONFORMANCE.

DRAWING INDEX

S100 GENERAL STRUCTURAL NOTES
S200 OVERALL STRUCTURAL FLOOR PLAN
S201 STRUCTURAL FLOOR PLAN NORTH
S202 STRUCTURAL FLOOR PLAN SOUTH
S301 SOUND BOOTH PLANS
S302 MECHANICAL DUCTS THROUGH STUD WALLS
S303 MECHANICAL DUCTS PENETRATIONS
S304 SEISMIC BRACING DETAILS
S305 SEISMIC BRACING DETAILS
S501 TYPICAL PARTITION WALL ELEVATION & DETAILS
S502 TYPICAL DETAILS
S503 TYPICAL DETAILS

Portland State UNIVERSITY
PSU CAPITAL PROJECTS & CONSTRUCTION

RMNC
RICHARD & MAURINE NEUBERGER CENTER

4TH FLOOR SPHR
INTERIOR REMODEL

PSU CAMPUS | BLOCK: 087
1600 SW 4TH AVENUE
PORTLAND, OREGON 97201

NBZ CONSULTING ENGINEERS
21617 SW SUSAN LANE
BEAVERTON, OR 97003

REGISTERED PROFESSIONAL ENGINEER
65743PE
OREGON
JUNE. 2, 2010
NADIA ZOUYED
Nadia Zouyed
EXPIRES 06/30/2028

ISSUED FOR BID & PERMIT

9/4/2026
HALF SIZE WHEN PRINTED AT 11X17

Sheet Title :
GENERAL STRUCTURAL NOTES

Revisions :
*

Date :
2026

Drawn : RB
Checked :

Sheet # :
S100

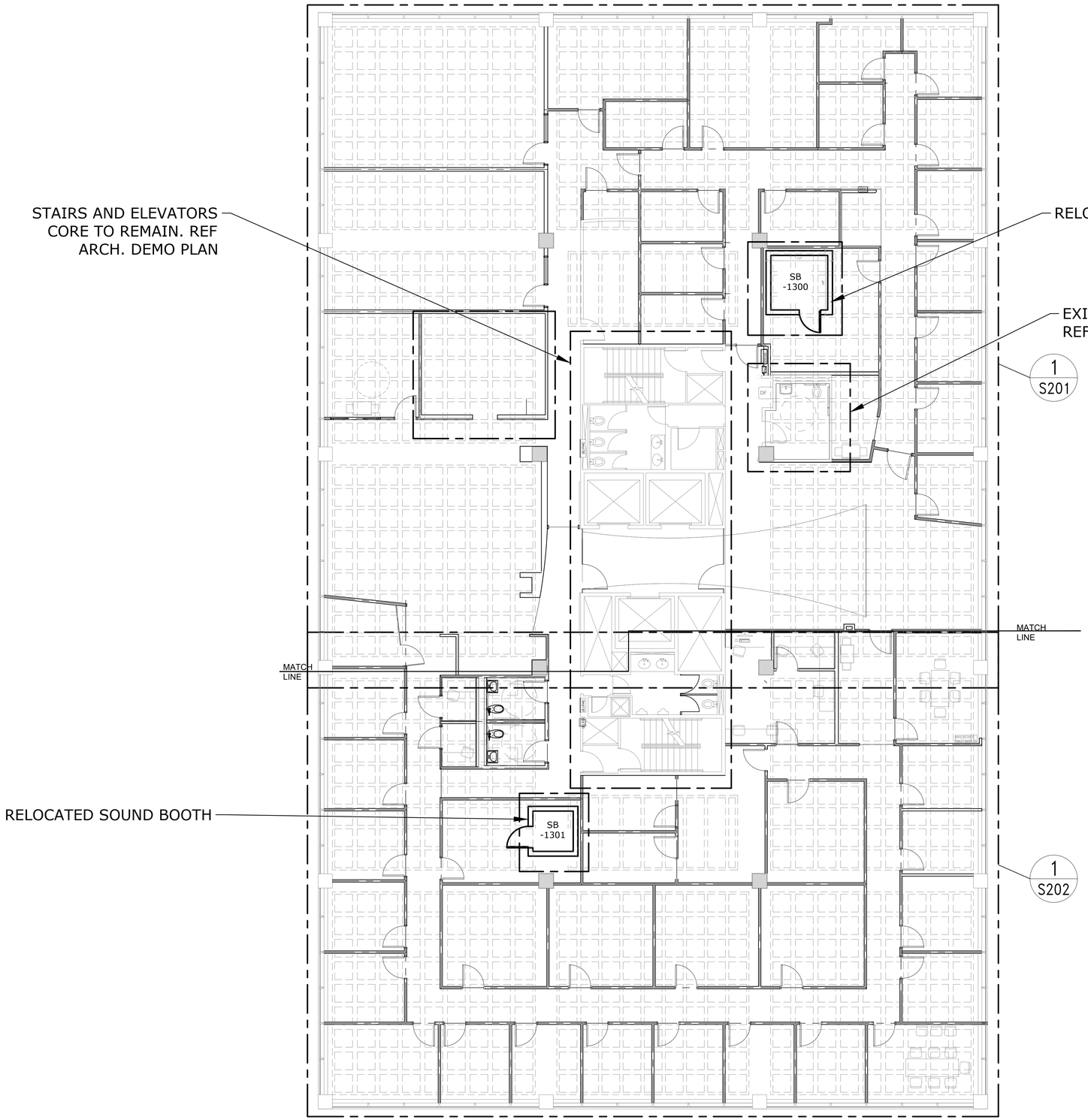

1 4TH FLOOR OVERALL STRUCTURAL FLOOR PLAN
1/8" = 1'-0"

NOTES:

1. 3-5/8" FULL HEIGHT PARTITION STUD WALL TO EXTEND BELOW THE SLAB JOISTS. REF ELEVATIONS SHEETS S302 & S303 AND ARCH. DRAWINGS.

2. 3-5/8" PARTIAL HEIGHT PARTITIONS STUD WALL TO EXTEND 6" ABOVE CEILING. REF DETAIL 5/S502 AND ARCH. DRAWINGS.

3. SB-X INDICATES RELOCATED SOUND BOOTH. REFERENCE SHEET S301.

4. THE ARCHITECTURAL RENOVATION OCCURS AT THE 4TH FLOOR. THIS LEVEL CONSISTS OF A 3 INCH CONCRETE WAFFLE SLAB. THE JOISTS ARE TYPICALLY 12" DEEP AND APPROXIMATELY AT 3'-0" O.C. THE BEAM WIDTHS VARY FROM 36" TO 60" WITH A 20" DEPTH. CONTRACTOR TO FIELD VERIFY DIMENSIONS.

5. ACOUSTIC INSULATION REQUIRED AT FULL HEIGHT STUD WALLS. ACOUSTIC INSULATION CONSULTANT TO COORDINATE INSTALLATION WITH STRUCTURAL AND ARCHITECTURAL.

6. MEP TO COORDINATE DUCT INSTALLATION TO THE UNDERSIDE OF THE 5TH FLOOR WITH STRUCTURAL AND ARCHITECTURE. THE 5TH FLOOR SLAB FRAMING IS SIMILAR TO 4TH FLOOR SLAB.

7. 3" MAXIMUM DIAMETER CORES ARE ACCEPTABLE THROUGH THE 4TH FLOOR SLAB. PLUMBING TO COORDINATE CORES LOCATION WITH STRUCTURAL AND ARCHITECTURAL DRAWINGS. DO NOT CORE THROUGH THE JOISTS, THE BEAMS, OR THROUGH THE SLAB REBAR, REF. 1/S504.

Portland State UNIVERSITY

PSU CAPITAL PROJECTS & CONSTRUCTION

RMNC

RICHARD & MAURINE NEUBERGER CENTER

4TH FLOOR SPHR
INTERIOR REMODEL

PSU CAMPUS | BLOCK: 087
1600 SW 4TH AVENUE
PORTLAND, OREGON 97201

NBZ CONSULTING ENGINEERS
21617 SW SUSAN LANE
BEAVERTON, OR 97003

REGISTERED PROFESSIONAL ENGINEER
65743PE
Nadia Zouyed
OREGON
JUNE. 2, 2010
NADIA ZOUYED
EXPIRES 06/30/2028

ISSUED FOR BID & PERMIT

9/4/2026

HALF SIZE WHEN PRINTED AT 11X17

Sheet Title :

OVERALL STRUCTURAL FLOOR PLAN

Revisions :	Date :
*	2026

Drawn : RB Checked :

Sheet # : **S200**

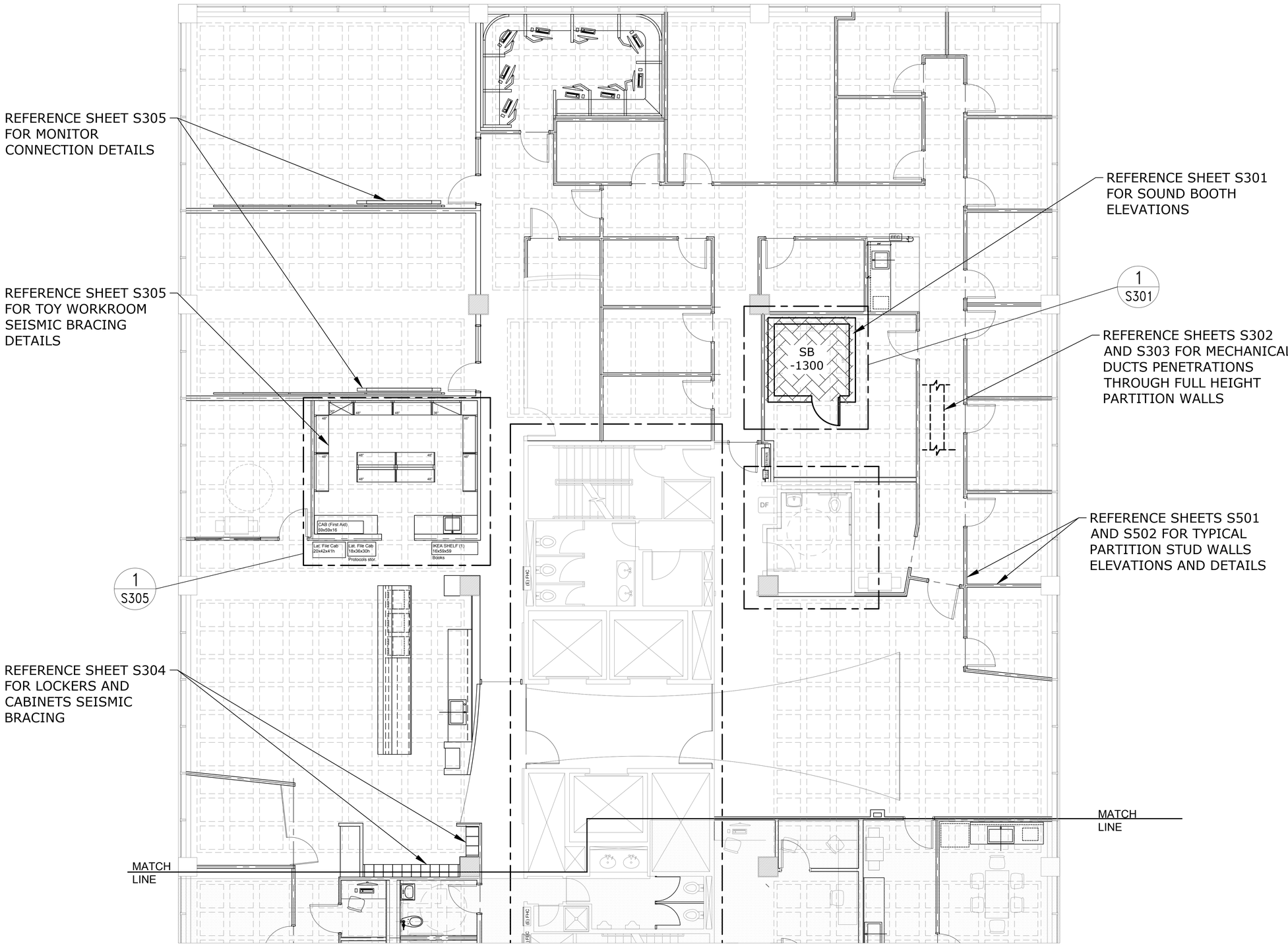

1 4TH FLOOR STRUCTURAL NORTH FLOOR PLAN
3/16" = 1'-0"

Portland State UNIVERSITY

PSU CAPITAL PROJECTS & CONSTRUCTION

RMNC

RICHARD & MAURINE NEUBERGER CENTER

4TH FLOOR SPHR
INTERIOR REMODEL

PSU CAMPUS | BLOCK: 087
1600 SW 4TH AVENUE
PORTLAND, OREGON 97201

NBZ CONSULTING ENGINEERS
21617 SW SUSAN LANE
BEAVERTON, OR 97003

REGISTERED PROFESSIONAL ENGINEER
65743PE
Nadia Zouyed
OREGON
JUNE. 2, 2010
NADIA ZOUYED
EXPIRES 06/30/2028

ISSUED FOR BID & PERMIT

9/4/2026

HALF SIZE WHEN PRINTED AT 11X17

Sheet Title :

STRUCTURAL FLOOR PLAN NORTH

Revisions :	Date :
*	2026

Drawn : RB Checked :

Sheet # : **S201**

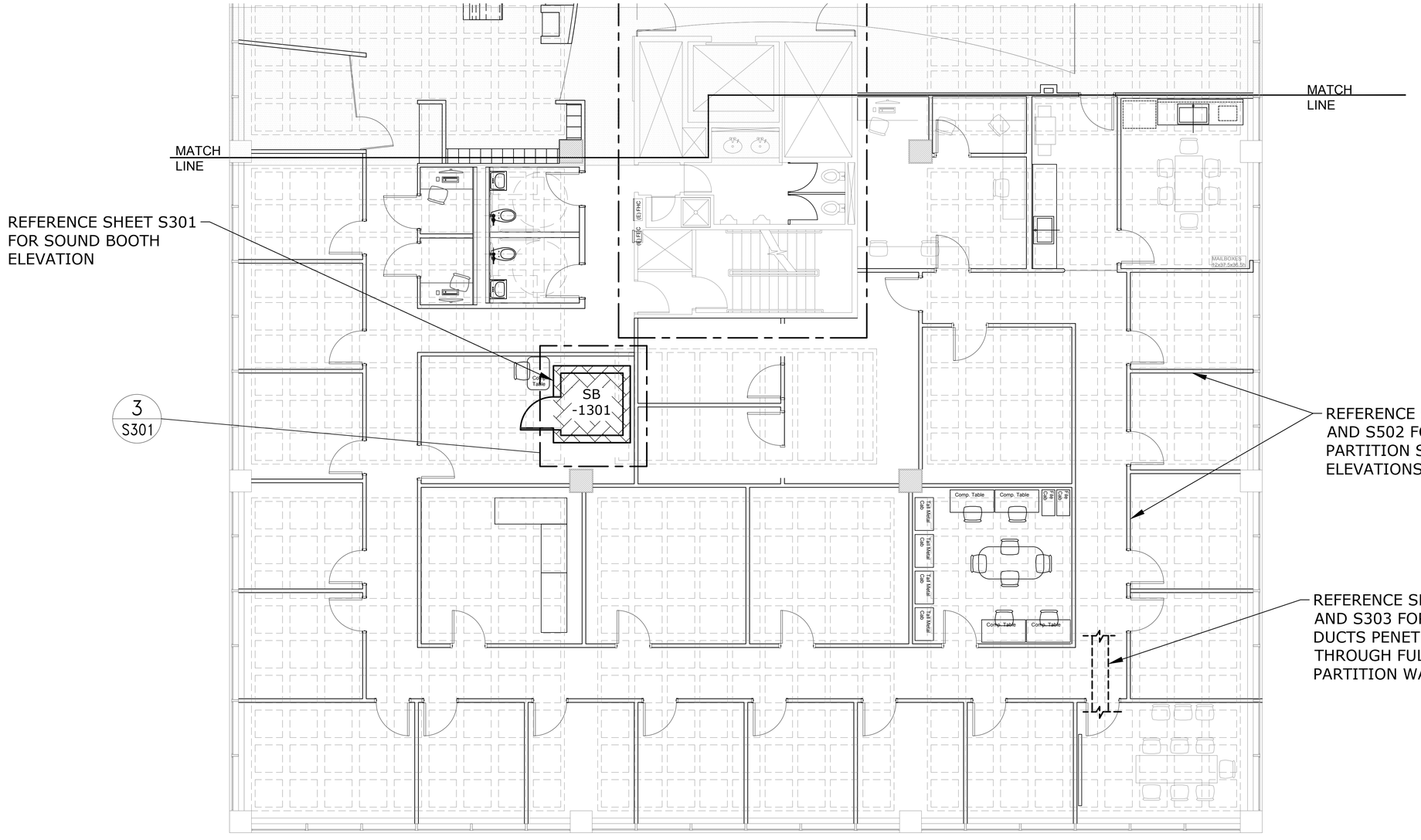

1 4TH FLOOR STRUCTURAL SOUTH FLOOR PLAN
3/16" = 1'-0"

Portland State UNIVERSITY

PSU CAPITAL PROJECTS & CONSTRUCTION

RMNC

RICHARD & MAURINE NEUBERGER CENTER

4TH FLOOR SPHR
INTERIOR REMODEL

PSU CAMPUS | BLOCK: 087
1600 SW 4TH AVENUE
PORTLAND, OREGON 97201

NBZ CONSULTING ENGINEERS
21617 SW SUSAN LANE
BEAVERTON, OR 97003

REGISTERED PROFESSIONAL ENGINEER
65743PE
Nadia Zouyed
OREGON
JUNE. 2, 2010
NADIA ZOUYED
EXPIRES 06/30/2028

ISSUED FOR BID & PERMIT

9/4/2026

HALF SIZE WHEN PRINTED AT 11X17

Sheet Title :

STRUCTURAL FLOOR PLAN SOUTH

Revisions :	Date :
*	2026

Drawn : RB Checked : GRG

Sheet # : **S202**

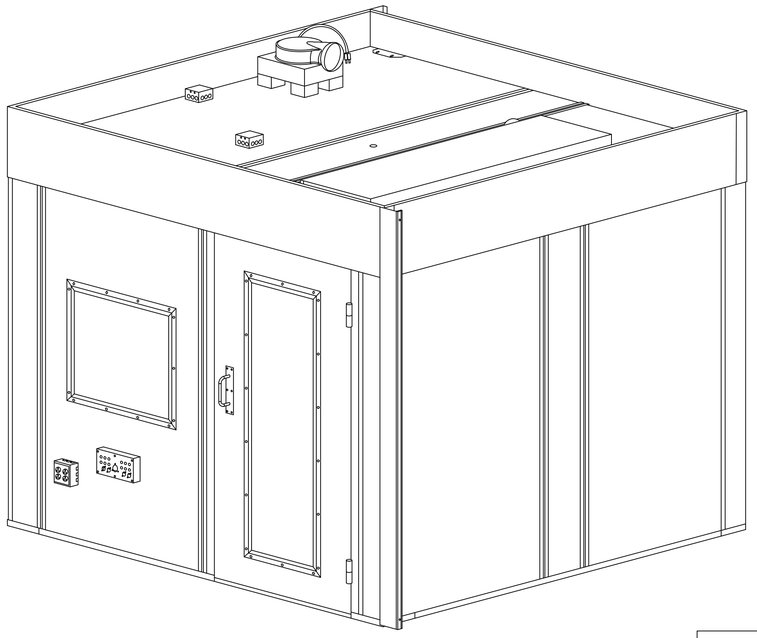

1 SOUND BOOTH #1300 ELEVATION
3/4" = 1'-0"

MAX WEIGHT=3650 LBS

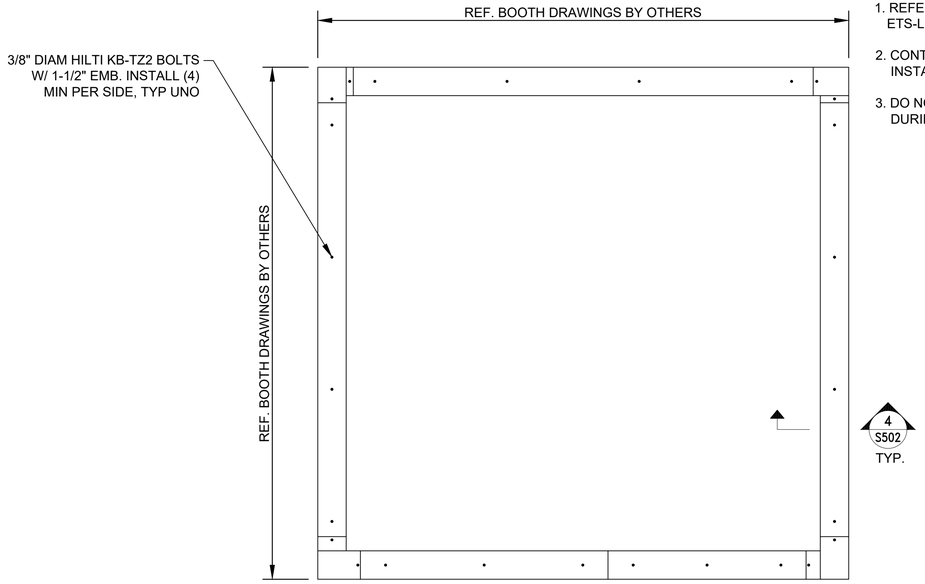

2 FLOOR CHANNEL LAYOUT
3/4" = 1'-0"

NOTES:

1. REFERENCE BOOTHS INSTALLATION PLANS PER ETS-LINDREN SHOP DRAWINGS.
2. CONTRACTOR TO VERIFY CONFIRM WEIGHT BEFORE INSTALLATION.
3. DO NOT CORE THROUGH SLAB OR BEAMS REBARS DURING ANCHORS INSTALLATION.

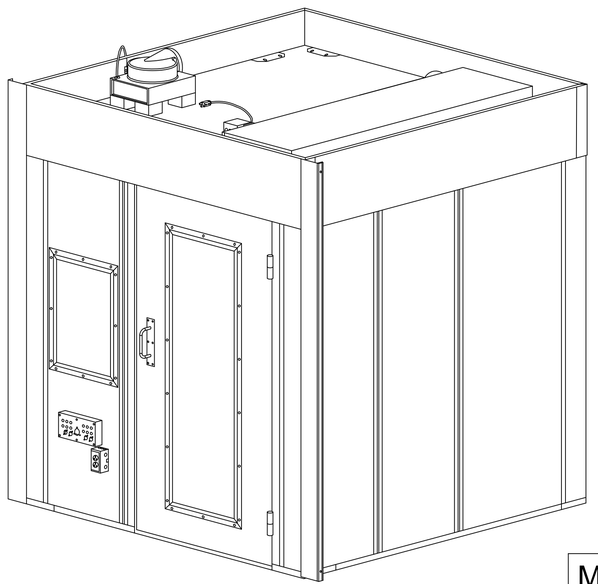

3 SOUND BOOTH #1301 ELEVATION
3/4" = 1'-0"

MAX WEIGHT=2900 LBS

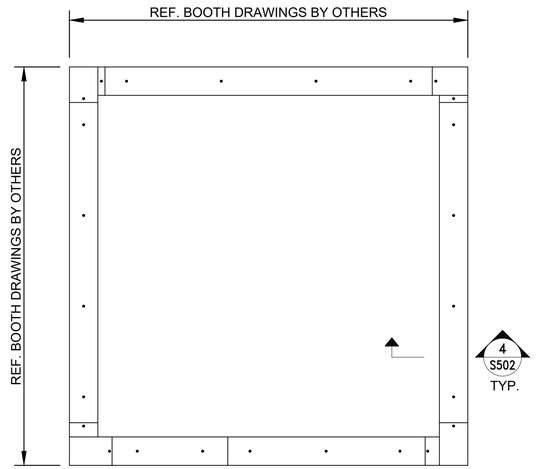

4 FLOOR CHANNEL LAYOUT
3/4" = 1'-0"

Portland State UNIVERSITY
PSU CAPITAL PROJECTS & CONSTRUCTION

RMNC
RICHARD & MAURINE NEUBERGER CENTER

4TH FLOOR SPHR
INTERIOR REMODEL

PSU CAMPUS | BLOCK: 087
1600 SW 4TH AVENUE
PORTLAND, OREGON 97201

NBZ CONSULTING ENGINEERS
21617 SW SUSAN LANE
BEAVERTON, OR 97003

REGISTERED PROFESSIONAL ENGINEER
65743PE
Nadia Zouyed
OREGON
JUNE. 2, 2010
NADIA ZOUYED
EXPIRES 06/30/2028

ISSUED FOR BID & PERMIT

9/4/2026
HALF SIZE WHEN PRINTED AT 11X17

Sheet Title :

SOUND BOOTH PLANS

Revisions : *
Date : 2026

Drawn : RB
Checked :

Sheet # : **S301**

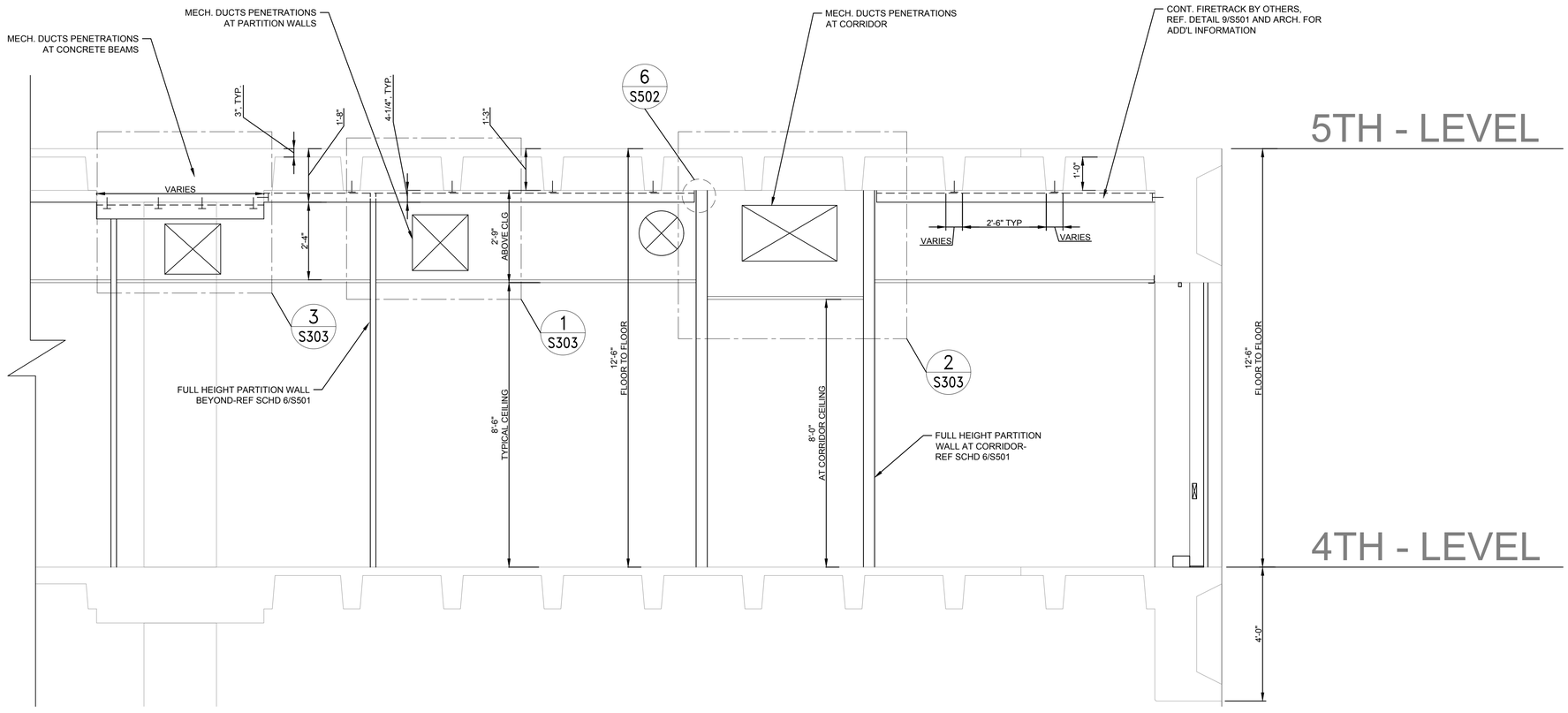

1 MECHANICAL DUCTS WALL PENETRATIONS
1/2" = 1'-0"

Portland State UNIVERSITY

PSU CAPITAL PROJECTS & CONSTRUCTION

RMNC

RICHARD & MAURINE NEUBERGER CENTER

4TH FLOOR SPHR
INTERIOR REMODEL

PSU CAMPUS | BLOCK: 087
1600 SW 4TH AVENUE
PORTLAND, OREGON 97201

NBZ CONSULTING ENGINEERS
21617 SW SUSAN LANE
BEAVERTON, OR 97003

REGISTERED PROFESSIONAL ENGINEER
65743PE
OREGON
JUNE. 2, 2010
NADIA ZOUYED
EXPIRES 06/30/2028

ISSUED FOR BID & PERMIT

9/4/2026

HALF SIZE WHEN PRINTED AT 11X17

Sheet Title :

MECHANICAL DUCTS THROUGH STUD WALLS

Revisions :	Date :
*	2026

Drawn : RB Checked :

Sheet # : **S302**

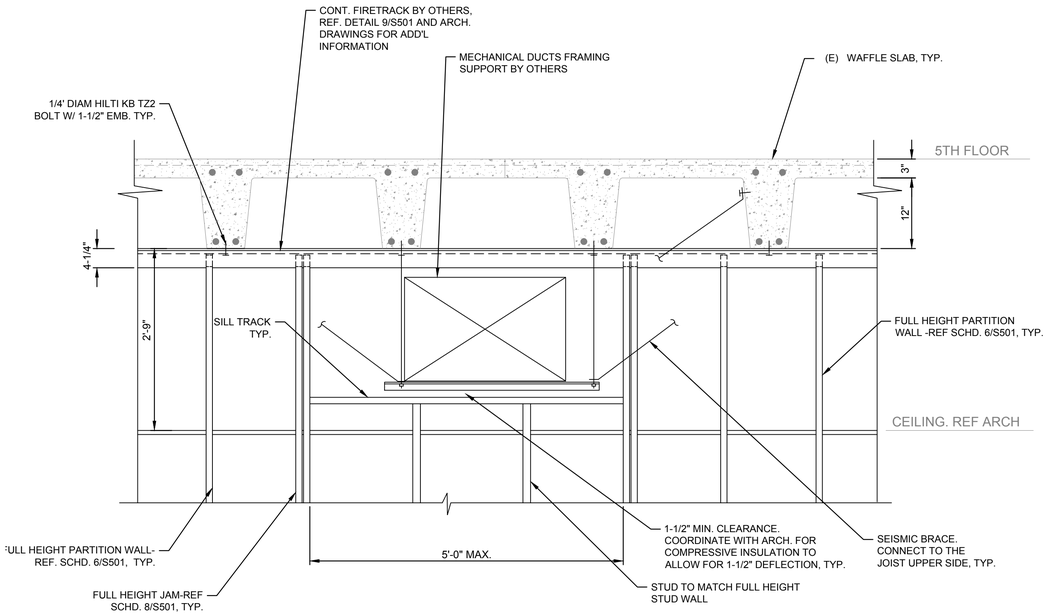

1 TYP MECHANICAL DUCTS WALL PENETRATIONS AT PARTITION STUD WALLS

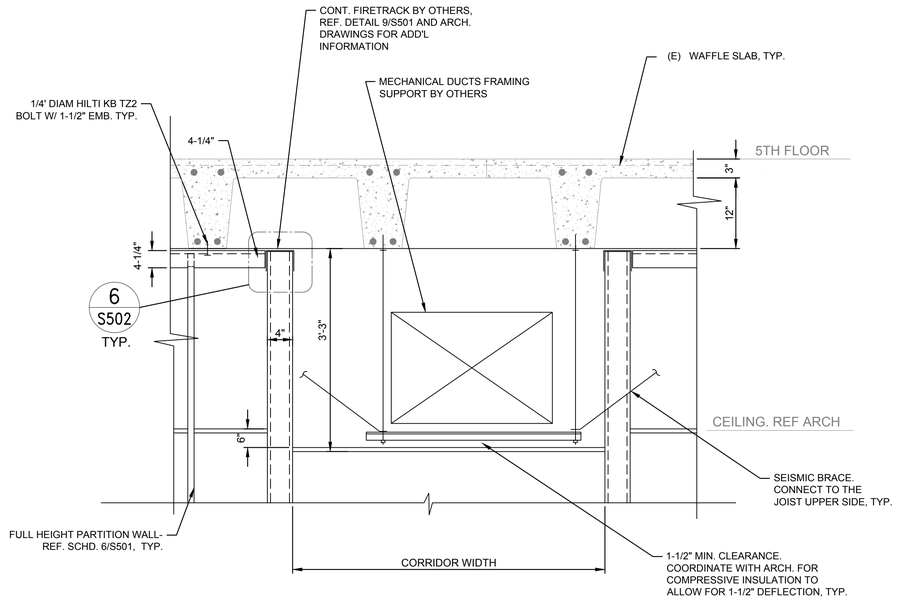

2 TYP MECHANICAL DUCTS PENETRATIONS AT CORRIDOR

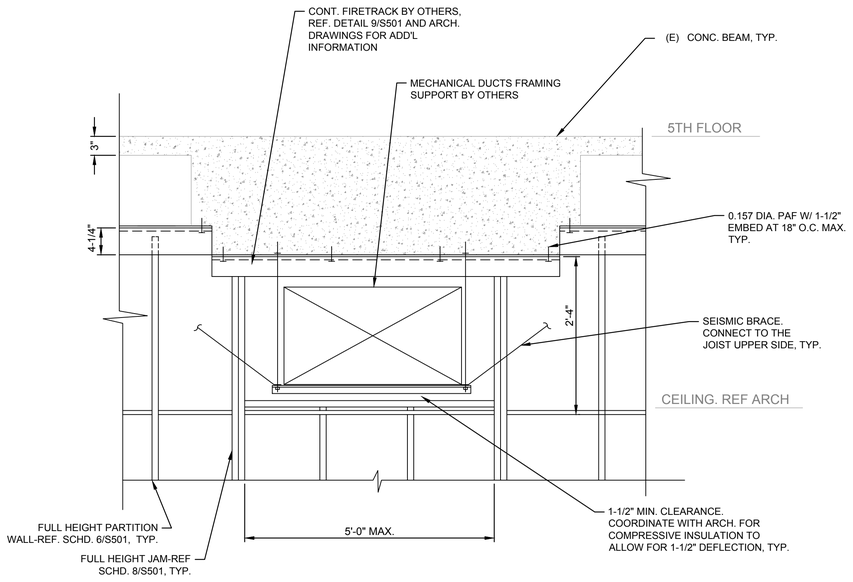

3 TYP MECHANICAL DUCTS PENETRATION AT CONCRETE BEAM

Portland State UNIVERSITY

PSU CAPITAL PROJECTS & CONSTRUCTION

RMNC

RICHARD & MAURINE NEUBERGER CENTER

4TH FLOOR SPHR
INTERIOR REMODEL

PSU CAMPUS | BLOCK: 087
1600 SW 4TH AVENUE
PORTLAND, OREGON 97201

NBZ CONSULTING ENGINEERS
21617 SW SUSAN LANE
BEAVERTON, OR 97003

REGISTERED PROFESSIONAL ENGINEER
65743PE
Nadia Zouyed
OREGON
JUNE. 2, 2010
NADIA ZOUYED
EXPIRES 06/30/2028

ISSUED FOR BID & PERMIT

9/4/2026

HALF SIZE WHEN PRINTED AT 11X17

Sheet Title :
MECHANICAL DUCTS PENETRATIONS

Revisions : *
Date : 2026

Drawn : RB
Checked :

Sheet # : **S303**

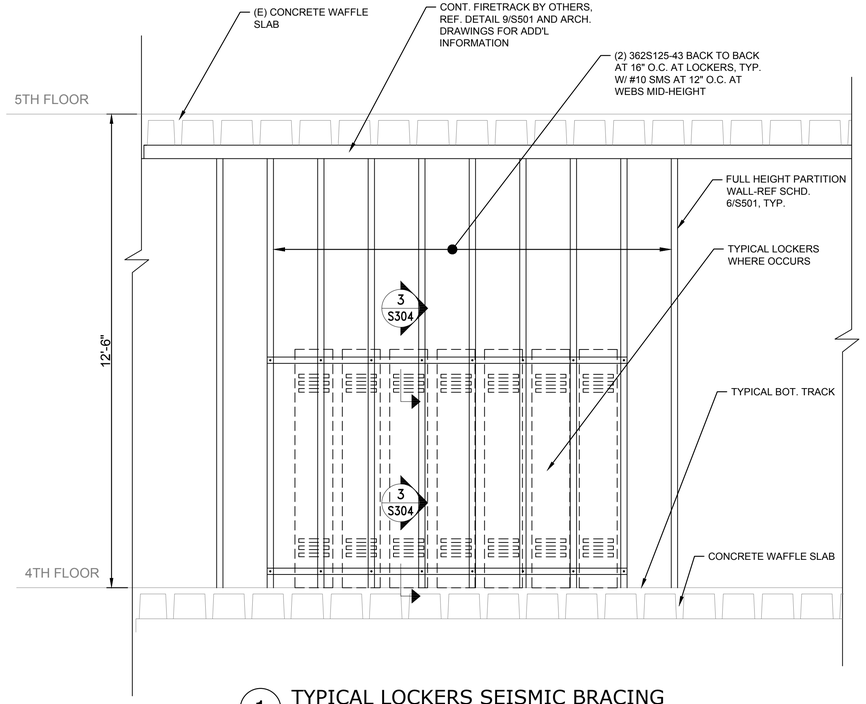

1 TYPICAL LOCKERS SEISMIC BRACING
1/2" = 1'-0"

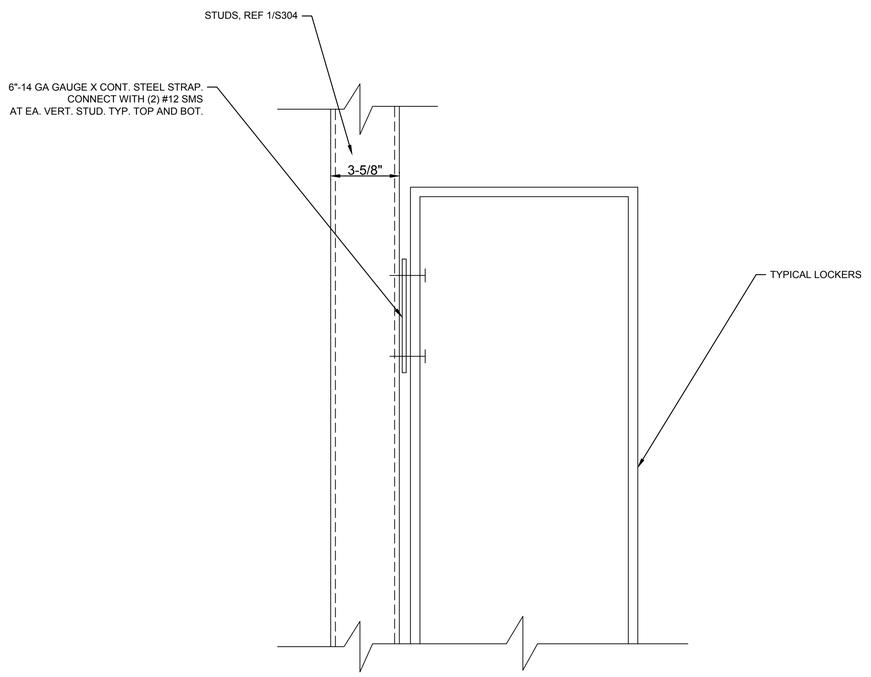

3 TYPICAL LOCKERS TOP AND BOT. CONN. DETAIL
3" = 1'-0"

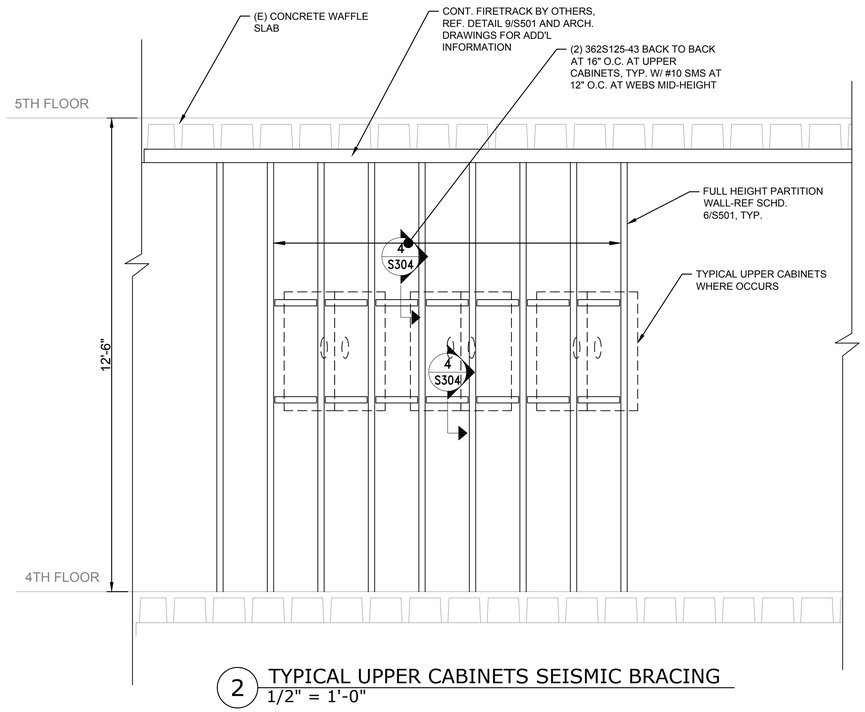

2 TYPICAL UPPER CABINETS SEISMIC BRACING
1/2" = 1'-0"

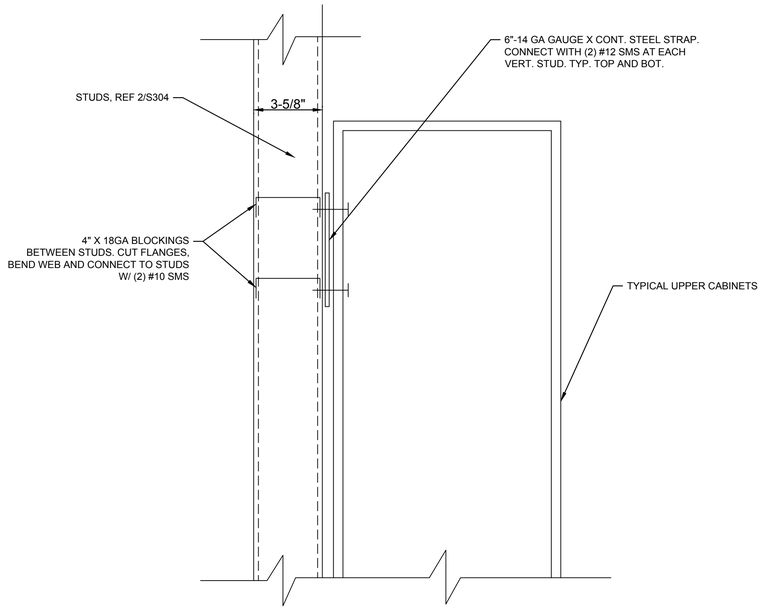

4 TYPICAL CABINETS TOP AND BOT. CONN. DETAIL
3" = 1'-0"

Portland State UNIVERSITY
PSU CAPITAL PROJECTS & CONSTRUCTION

RMNC
RICHARD & MAURINE NEUBERGER CENTER

4TH FLOOR SPHR
INTERIOR REMODEL

PSU CAMPUS | BLOCK: 087
1600 SW 4TH AVENUE
PORTLAND, OREGON 97201

NBZ CONSULTING ENGINEERS
21617 SW SUSAN LANE
BEAVERTON, OR 97003

REGISTERED PROFESSIONAL ENGINEER
65743PE
Nadia Zouyed
OREGON
JUNE. 2, 2010
NADIA ZOUYED
EXPIRES 06/30/2028

ISSUED FOR BID & PERMIT

9/4/2026
HALF SIZE WHEN PRINTED AT 11X17

Sheet Title :
SEISMIC BRACING DETAILS

Revisions :	Date :
*	2026

Drawn : RB
Checked :

Sheet # : **S304**

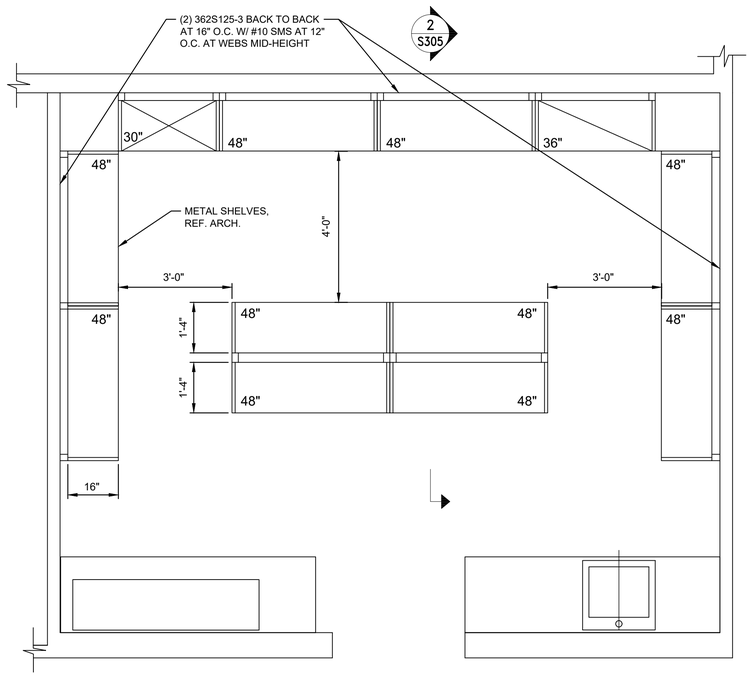

1 TOY WORKROOM SHELVES SEISMIC BRACING-RM 464
1/2" = 1'-0"

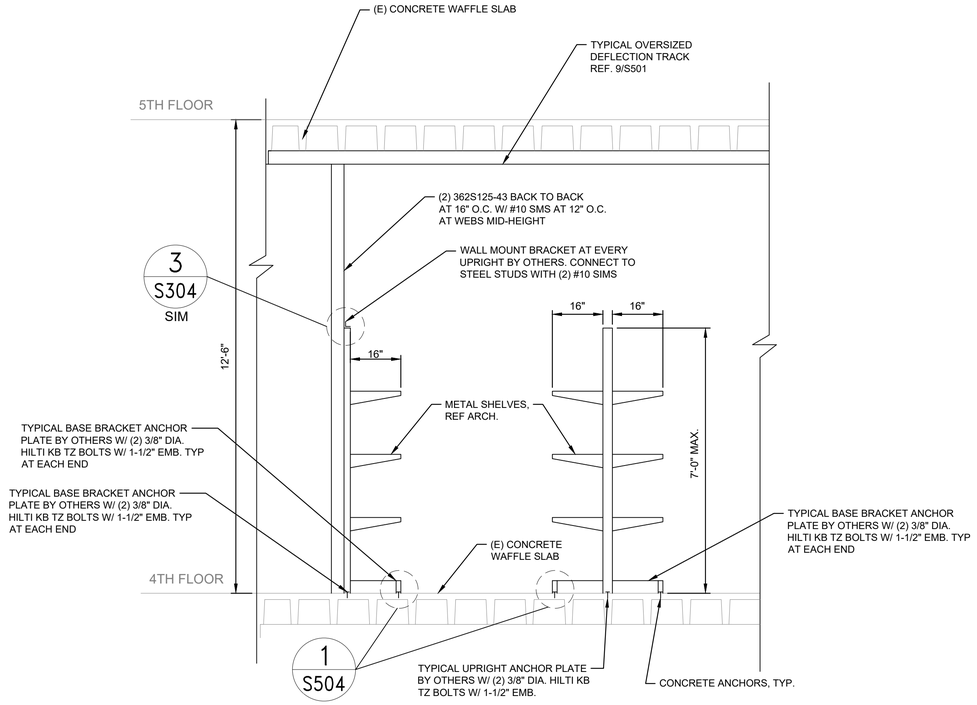

2 TOY WORKROOM SHELVES SEISMIC BRACING-RM 464
1/2" = 1'-0"

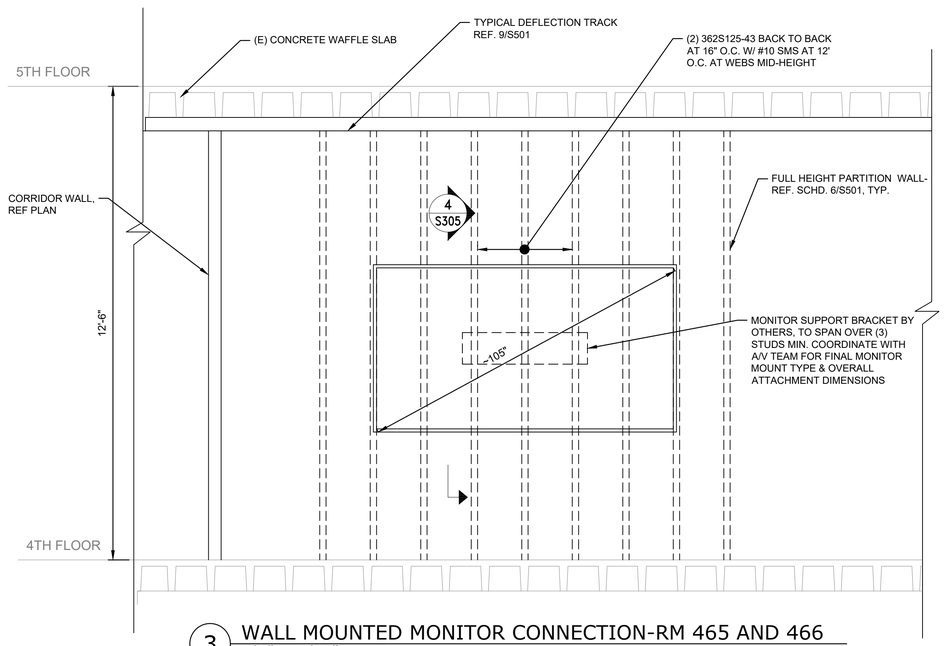

3 WALL MOUNTED MONITOR CONNECTION-RM 465 AND 466
1/2" = 1'-0"

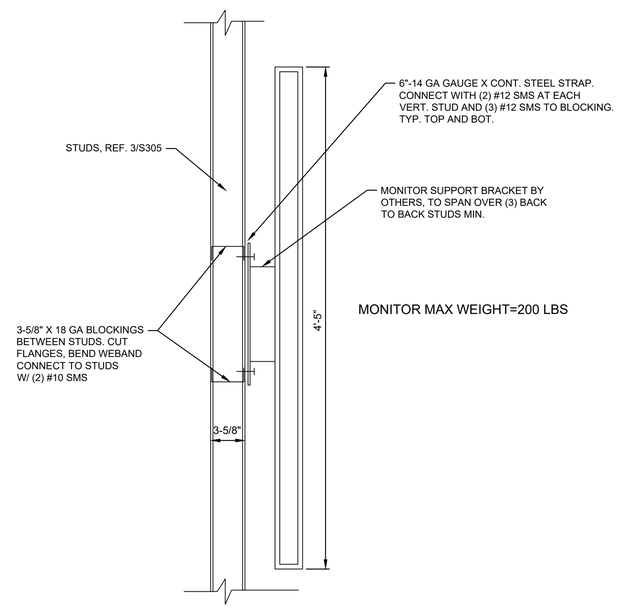

4 TYPICAL MONITOR CONNECTION DETAIL
1 1/2" = 1'-0"

Portland State UNIVERSITY

PSU CAPITAL PROJECTS & CONSTRUCTION

RMNC

RICHARD & MAURINE NEUBERGER CENTER

4TH FLOOR SPHR
INTERIOR REMODEL

PSU CAMPUS | BLOCK: 087
1600 SW 4TH AVENUE
PORTLAND, OREGON 97201

NBZ CONSULTING ENGINEERS
21617 SW SUSAN LANE
BEAVERTON, OR 97003

REGISTERED PROFESSIONAL ENGINEER
65743PE
Nadia Zouyed
OREGON
JUNE. 2, 2010
NADIA ZOUYED
EXPIRES 06/30/2028

ISSUED FOR BID & PERMIT

9/4/2026

HALF SIZE WHEN PRINTED AT 11X17

Sheet Title :

SEISMIC BRACING DETAILS

Revisions : *

Date : 2026

Drawn : RB

Checked :

Sheet # : **S305**

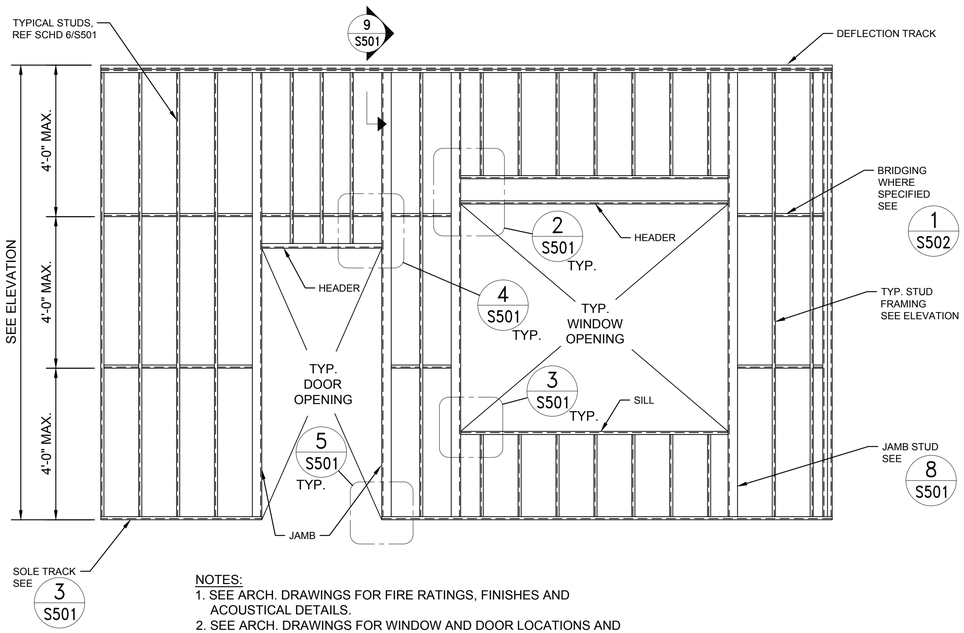

NOTES:
1. SEE ARCH. DRAWINGS FOR FIRE RATINGS, FINISHES AND ACOUSTICAL DETAILS.
2. SEE ARCH. DRAWINGS FOR WINDOW AND DOOR LOCATIONS AND DIMENSIONS.
3. UNLESS NOTED OTHERWISE, ALL STUDS TO BE FASTENED TO TOP AND BOTTOM TRACK WITH #10 SCREWS AT EACH FLANGE.

1 TYP. FULL HEIGHT NON-BEARING PARTITION WALL ELEVATION
1/2" = 1'-0"

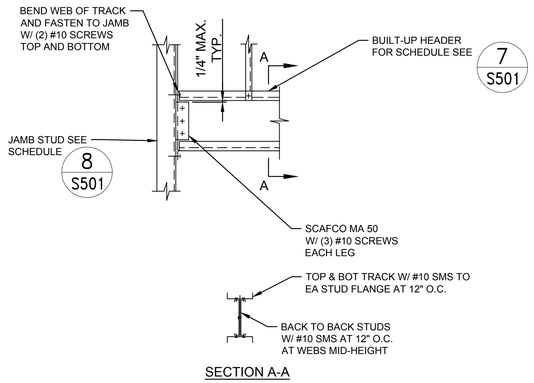

2 TYP. WALL HEADER DETAIL
1" = 1'-0"

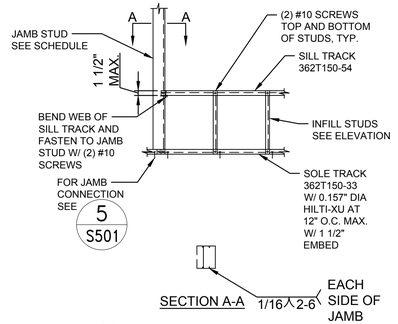

3 TYP. SILL DETAIL
1 1/2" = 1'-0"

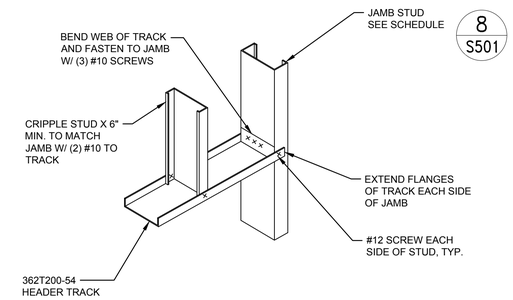

4 TYP. HEADER TO JAMB DETAIL
1" = 1'-0"

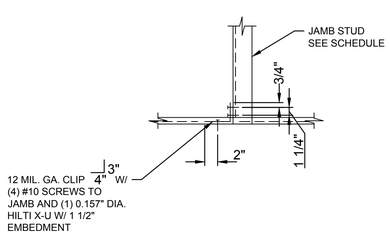

5 TYP. BASE OF JAMB CONNECTION
1" = 1'-0"

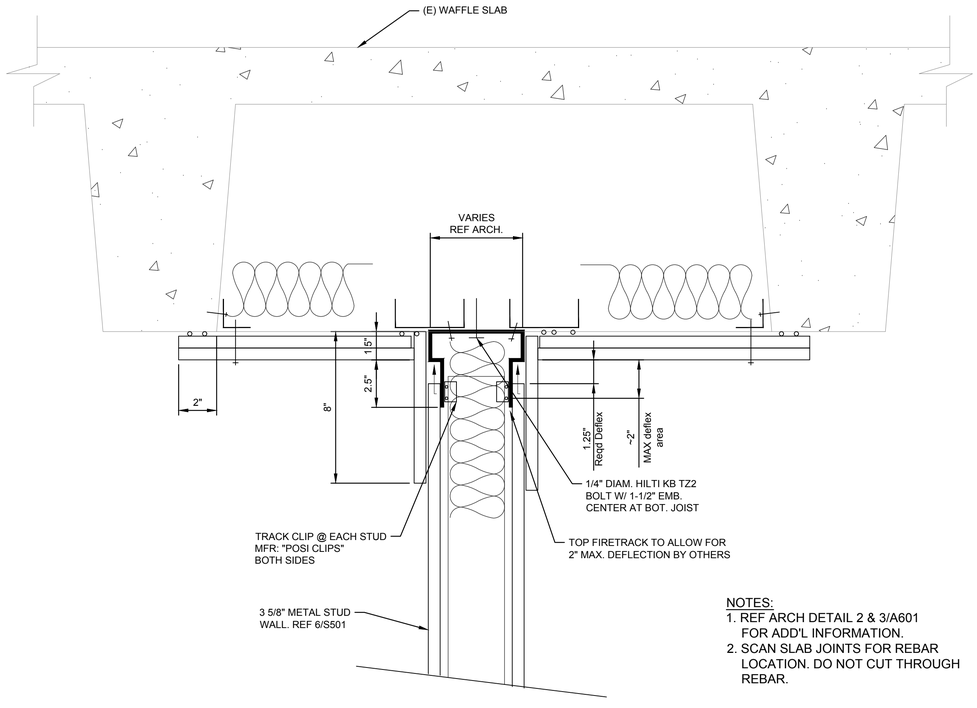

NOTES:
1. REF ARCH DETAIL 2 & 3/A601 FOR ADD'L INFORMATION.
2. SCAN SLAB JOINTS FOR REBAR LOCATION. DO NOT CUT THROUGH REBAR.

9 TYPICAL FULL HEIGHT WALL CONN. AT WAFFLE SLAB
3" = 1'-0"

METAL STUD WALL SCHEDULE				
STUD SIZE	SPACING	BOTTOM TRACK	TOP TRACK	OBS
362S125-30	AT 16" O.C.	362T150-33	362T150-33	U.N.O.
362S125-30	AT 24" O.C.	362T150-33	362T150-33	AT ACOUSTICAL WALLS REF. ARCH

6 METAL STUD WALL SCHEDULE
1/2" = 1'-0"

HEADER SCHEDULE			
TOP AND BOTTOM RACK	STUDS	MAX. OPENING DIMENSIONS	NOTES
362T150-43	(2) 600S162-43	6'-0"	SEE 2 S501

7 HEADER SCHEDULE
1/2" = 1'-0"

JAMB SCHEDULE	
JAMB SIZE	NOTES
(2) 362S162-43	SEE 3 S501

8 NON-BEARING WALL JAMB SCHEDULE
1/2" = 1'-0"

Portland State UNIVERSITY
PSU CAPITAL PROJECTS & CONSTRUCTION

RMNC
RICHARD & MAURINE NEUBERGER CENTER

4TH FLOOR SPHR
INTERIOR REMODEL

PSU CAMPUS | BLOCK: 087
1600 SW 4TH AVENUE
PORTLAND, OREGON 97201

NBZ CONSULTING ENGINEERS
21617 SW SUSAN LANE
BEAVERTON, OR 97003

REGISTERED PROFESSIONAL ENGINEER
65743PE
Nadia Zouyed
OREGON
JUNE 2, 2010
NADIA ZOUYED
EXPIRES 06/30/2028

ISSUED FOR BID & PERMIT

9/4/2026
HALF SIZE WHEN PRINTED AT 11X17

Sheet Title :
TYPICAL PARTITION WALL ELEVATION AND DETAILS

Revisions : *
Date : 2026

Drawn : RB
Checked :

Sheet # : **S501**

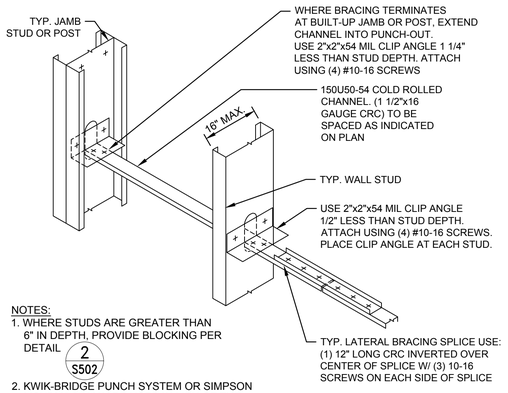

NOTES:
1. WHERE STUDS ARE GREATER THAN 6" IN DEPTH, PROVIDE BLOCKING PER DETAIL 2/S502
2. KWIK-BRIDGE PUNCH SYSTEM OR SIMPSON MSUBM3.25 MAY BE USED IN LIEU OF THE CLIP ANGLE SHOWN.

1 TYPICAL BRIDGING DETAIL
1 1/2" = 1'-0"

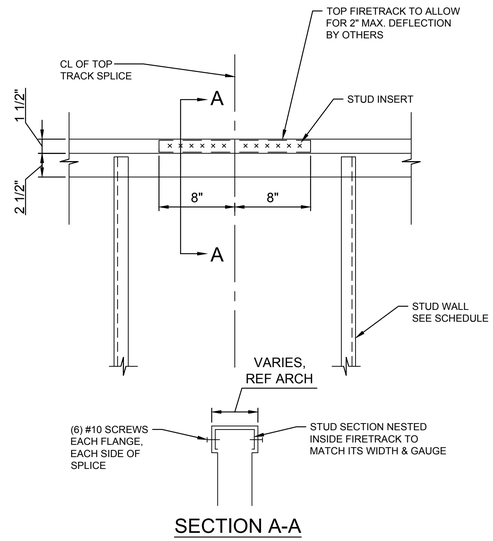

SECTION A-A

3 TYP. TOP FIRETRACK SPLICE CONN. DETAIL
1 1/2" = 1'-0"

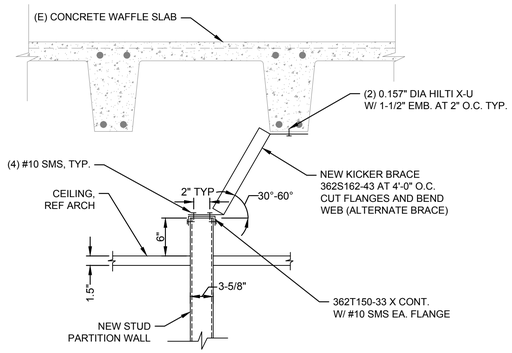

NOTE: DO NOT DRIVE POWDER ACTUATED FASTENER THROUGH REBARS

5 TYPICAL PARTIAL HEIGHT WALL BRACING
1" = 1'-0"

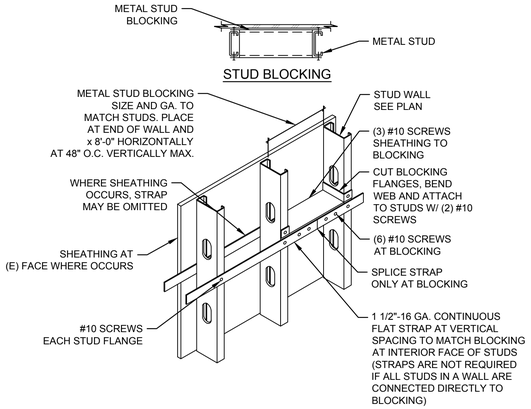

2 TYP. BLOCKING DETAIL
1 1/2" = 1'-0"

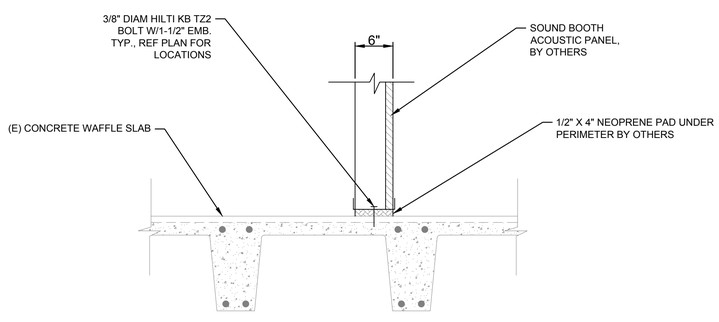

4 TYPICAL SOUND BOOT CONN. DETAIL
1" = 1'-0"

NOTE:
TOP FIRETRACK BY OTHERS, CUT FLANGES & EXTEND WEB ON TOP OF TRACK. CONNECT W/ (6) #12 SIMS. BENT FLANGES CONNECT W/ (2) #12 SMS, EA. SIDE

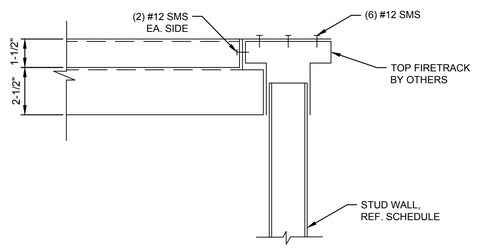

6 TYPICAL FIRETRACK CONN. DETAIL
3" = 1'-0"

Portland State UNIVERSITY

PSU CAPITAL PROJECTS & CONSTRUCTION

RMNC
RICHARD & MAURINE NEUBERGER CENTER

4TH FLOOR SPHR
INTERIOR REMODEL

PSU CAMPUS | BLOCK: 087
1600 SW 4TH AVENUE
PORTLAND, OREGON 97201

NBZ CONSULTING ENGINEERS
21617 SW SUSAN LANE
BEAVERTON, OR 97003

REGISTERED PROFESSIONAL ENGINEER
65743PE
Nadia Zouyed
OREGON
JUNE. 2, 2010
NADIA ZOUYED
EXPIRES 06/30/2028

ISSUED FOR BID & PERMIT

9/4/2026
HALF SIZE WHEN PRINTED AT 11X17

Sheet Title :

TYPICAL DETAILS

Revisions : *
Date : 2026

Drawn : RB
Checked :

Sheet # : **S502**

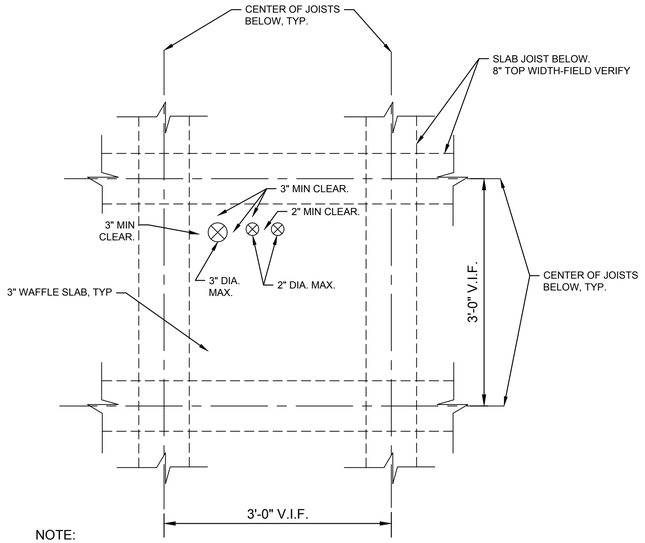

NOTE:

1. DO NOT CORE THROUGH THE WAFFLE SLAB JOISTS.
2. SCAN SLAB FOR EXISTING REBARS. DO NOT CORE OR CUT REBAR.
3. COORDINATE HOLES LOCATION WITH ARCHITECTURE AND PLUMBING.

1 TYPICAL WAFFLE SLAB OPENING
1" = 1'-0"

Portland State UNIVERSITY

PSU CAPITAL PROJECTS & CONSTRUCTION

RMNC

RICHARD & MAURINE NEUBERGER CENTER

4TH FLOOR SPHR
INTERIOR REMODEL

PSU CAMPUS | BLOCK: 087
1600 SW 4TH AVENUE
PORTLAND, OREGON 97201

NBZ CONSULTING ENGINEERS
21617 SW SUSAN LANE
BEAVERTON, OR 97003

REGISTERED PROFESSIONAL ENGINEER
65743PE
Nadia Zouyed
OREGON
JUNE. 2, 2010
NADIA ZOUYED
EXPIRES 06/30/2028

ISSUED FOR BID & PERMIT

9/4/2026

HALF SIZE WHEN PRINTED AT 11X17

Sheet Title :

TYPICAL DETAILS

Revisions :	Date :
*	2026

Drawn : RB Checked :

Sheet # : **S503**

MECHANICAL LEGEND

NOTE: NOT ALL SYMBOLS OR ABBREVIATIONS ARE APPLICABLE TO THIS PROJECT. REFER TO DETAILS AND NOTES FOR MOUNTING HEIGHTS.

GENERAL SYMBOLS

SYMBOL	DESCRIPTION
(N)	NEW
(E)	EXISTING TO REMAIN
(D)	EXISTING TO BE REMOVED
(ER)	EXISTING TO BE RELOCATED
(RL)	NEW LOCATION OF RELOCATED ITEM
(F)	FUTURE
℄	CENTER LINE
	POINT OF CONNECTION OR POINT OF DISCONNECTION
1 / M-1	DETAIL 1, DRAWING M-1
A / M-1	SECTION A, DRAWING M-1
1 / M-1	ELEVATION 1, DRAWING M-1
EXH / 1	RISER IDENTIFICATION EXHAUST #1
HP / 1	EQUIPMENT IDENTIFICATION HEAT PUMP UNIT #1
1	KITCHEN EQUIPMENT TAG
#	KEYED NOTE
150	DIRECTION OF TRANSFER AIRFLOW (150 CFM)
78°F	78 DEGREES FAHRENHEIT

PIPING

SYMBOL	DESCRIPTION
	DIRECTION OF SLOPE
	DIRECTION OF FLOW
	PIPE UP (OR UP & DOWN WITH NOTATION)
	PIPE DOWN
	PIPE DROP/PIPE RISE
	TOP CONNECTION - BRANCH LINE
	BOTTOM CONNECTION - BRANCH LINE
	PIPE ANCHOR
	TEE UP
	TEE DOWN
	STRAINER
	STRAINER WITH BLOW OFF
	INLINE PUMP
	BASE MOUNTED PUMP
	TEST TAP (PETE'S PLUG)
	MANUAL AIR VENT
	AUTOMATIC AIR VENT
	VACUUM BREAKER
	VENT THRU ROOF
	PIPE GUIDE
	EXPANSION JOINT
	FLEXIBLE CONNECTOR
	UNION
	CAPPED OR PLUGGED TEE
	BLIND FLANGE, CAP
	CONCENTRIC REDUCER
	EXPANSION LOOP
	VALVE ON RISE
6"	PIPE SIZE (DIAMETER IN INCHES)

PIPING SYSTEMS

SYMBOL	DESCRIPTION
CHWS	CHILLED WATER SUPPLY
CHWR	CHILLED WATER RETURN
HWS	HEATING WATER SUPPLY
HWR	HEATING WATER RETURN
CWS	CONDENSER WATER SUPPLY
CWR	CONDENSER WATER RETURN
RD	REFRIGERANT DISCHARGE
RS	REFRIGERANT SUCTION

VALVES & GAUGES

SYMBOL	DESCRIPTION
	BALL VALVE
	2-POSITION SOLENOID CONTROL VALVE
	PRESSURE AND TEMP. RELIEF VALVE
	BUTTERFLY VALVE
	GATE VALVE
	BALANCING VALVE
	ANGLE GATE VALVE
	GLOBE VALVE
	ANGLE GLOBE VALVE
	CHECK VALVE
	2-WAY MODULATING CONTROL VALVE
	3-WAY MODULATING CONTROL VALVE
	NON-SLAM WAFER CHECK VALVE
	PRESSURE REDUCING VALVE (PRV)
	DIAPHRAGM VALVE
	LOCK SHIELD VALVE
	NEEDLE VALVE
	VENTURI FLOW METER
	PRESSURE GAUGE
	PRESS. GAUGE WITH COCK AND SNUBBER
	THERMOMETER

DUCTWORK

SYMBOL	DESCRIPTION
AD/AP	ACCESS DOOR / ACCESS PANEL
	FLEXIBLE CONNECTION
	FLEXIBLE DUCT RUNOUT TO DIFFUSER
12x6	RECTANGULAR DUCT SIZE (WIDTH x DEPTH IN INCHES)
18ø	ROUND DUCT SIZE (DIAMETER IN INCHES)
24x12ø	OVAL DUCT SIZE (WIDTH x DEPTH IN INCHES)
	DUCT THROUGH BEAM PENETRATION
R D	DUCT OFFSET (RISE OR DROP)
VD RVD	VOLUME DAMPER OR REMOTE VOLUME DAMPER
FD SD FSD	FIRE, SMOKE OR FIRE/SMOKE DAMPER
MD BDD	MOTORIZED DAMPER, BACKDRAFT DAMPER
	SUPPLY DUCT UP
	SUPPLY DUCT DOWN
	EXHAUST DUCT UP
	EXHAUST DUCT DOWN
	RETURN DUCT UP
	RETURN DUCT DOWN
	CROSS SECTION OF SUPPLY DUCT
	CROSS SECTION OF EXHAUST AIR DUCT
	CROSS SECTION OF RETURN AIR DUCT
	CROSS SECTION OF ROUND DUCT
	DUCT ELBOW WITH TURNING VANES
	SMOOTH RADIUS DUCT ELBOW WITHOUT TURNING VANES
	CONICAL BRANCH FITTING
	45 DEGREE BOOT LO-LOSS BRANCH FITTING
	WYE BRANCH FITTING
12x6	ACOUSTICAL LINING DUCT (DIMENSION IS INSIDE DIMENSION)
M	MOTORIZED DAMPER INSIDE DUCT
TAG NECK SIZE-CFM	TRANSFER DUCT (WITH LINER)
8' - 11" BOD	INDICATES 8'11" TO BOTTOM OF DUCT
TAG NECK SIZE-CFM	RECTANGULAR OR ROUND SUPPLY DIFFUSER OR REGISTER (SEE SCHEDULE). 4-WAY THROW UNLESS INDICATED OTHERWISE. EXAMPLE: SB12X12-400 REFERS TO TAG SB WITH 12"X12" NECK AND 400 CFM
TAG NECK SIZE-CFM	RECTANGULAR OR ROUND EXHAUST GRILLE OR REGISTER (SEE SCHEDULE)
TAG NECK SIZE-CFM	RECTANGULAR OR ROUND RETURN GRILLE OR REGISTER (SEE SCHEDULE)
TAG NECK SIZE-CFM	WALL SUPPLY GRILLE OR REGISTER (SEE SCHEDULE)
TAG NECK SIZE-CFM	WALL RETURN OR EXHAUST GRILLE OR REGISTER (SEE SCHEDULE)
TAG NECK SIZE-LENGTH-CFM	LINEAR SLOT DIFFUSER (SEE SCHEDULE FOR NUMBER OF SLOTS). 2-WAY THROW UNLESS NOTED OTHERWISE. EXAMPLES: SN10-48-250 REFERS TO TAG SN WITH 10" ROUND NECK, 48" SLOT LENGTH AND 250 CFM.
	VARIABLE AIR VOLUME TERMINAL UNIT
	VARIABLE AIR VOLUME TERMINAL UNIT W/ REHEAT
	FAN POWERED TERMINAL UNIT
	FAN POWERED TERMINAL UNIT W/ REHEAT

CONTROLS

SYMBOL	DESCRIPTION
WALL / CEILING MOUNTED DEVICE: TS	TEMPERATURE SENSOR
T	THERMOSTAT OR THERMOMETER
CO2	CARBON DIOXIDE SENSOR
OS	OCCUPANCY SENSOR
H	HUMIDITY SENSOR OR HUMIDISTAT
SP	STATIC PRESSURE SENSOR
RS	REFRIGERANT SENSOR
CO	CARBON MONOXIDE SENSOR
H	HYDROGEN SENSOR
EQUIPMENT / SYSTEM MOUNTED DEVICE: DSD	DUCT SMOKE DETECTOR
TS	TEMPERATURE SENSOR
SP	STATIC PRESSURE SENSOR
PS	PRESSURE SENSOR OR SWITCH
DPS	DIFFERENTIAL PRESSURE SENSOR
AFMS	AIR FLOW MEASURING STATION
HS	HUMIDITY SENSOR
FS	FLOW SENSOR OR SWITCH
FM	FLOW METER
CS	CURRENT SENSOR
M	MOTOR
A	ACTUATOR
HM	HYDROGEN MONITOR
RM	REFRIGERANT MONITOR
AI	ANALOG INPUT
AO	ANALOG OUTPUT
DI	DIGITAL INPUT
DO	DIGITAL OUTPUT
BAS	BUILDING AUTOMATION SYSTEM
PI	PULSING INPUT

EARLY PROCUREMENT

OWNER AND/OR CONTRACTOR DIRECTED EARLY PROCUREMENT OF EQUIPMENT AND/OR COMPONENTS IS INHERENTLY RISKY AND CAN RESULT IN THE PROCUREMENT OF INAPPROPRIATE EQUIPMENT AMONG OTHER RISKS. GLUMAC WILL NOT ASSUME RESPONSIBILITY NOR LIABILITY ASSOCIATED WITH THE DIRECTION TO PROCEED WITH EARLY PROCUREMENT. CHANGES TO EARLY PROCUREMENT EQUIPMENT AND/OR COMPONENTS MAY BE REQUIRED DUE TO THE FOLLOWING, AMONG OTHER ISSUES:

- THE ARCHITECTURAL, STRUCTURAL, CIVIL AND INTERIOR DESIGN AND ENGINEERING OF THE PROJECT IS NOT COMPLETE.
- THE DESIGN AND ENGINEERING OF THE SUBJECT PROJECT IS NOT COMPLETE.
- THE PROJECT HAS NOT UNDERGONE PERMIT REVIEW BY THE AUTHORITY(S) HAVING JURISDICTION.
- THE PROJECT HAS NOT UNDERGONE OWNER REVIEW EITHER BY THE OWNER OR BY ITS DESIGNATED REVIEWER.
- THE PROJECT HAS NOT UNDERGONE THIRD-PARTY COMMISSIONING DESIGN REVIEW.

DEFERRED SUBMITTALS

1. SEISMIC BRACING FOR MECHANICAL AND PLUMBING SYSTEMS, INCLUDING EQUIPMENT, PIPING, AND DUCTWORK.

*FOR ALL ITEMS LISTED ABOVE, THE PLUMBING AND/OR MECHANICAL CONTRACTOR SHALL PROVIDE A DELEGATED DESIGN SUBMITTAL WITH DOCUMENTATION AND ENGINEERING REQUIRED TO SATISFY REQUIREMENTS OF THE AUTHORITY HAVING JURISDICTION (AHJ). THE DELEGATED DESIGN SUBMITTAL SHALL INCLUDE BUT NOT BE LIMITED TO ANALYSIS DATA SIGNED AND SEALED BY A QUALIFIED PROFESSIONAL ENGINEER RESPONSIBLE FOR THEIR PREPARATION.

MECHANICAL DRAWING LIST

SHEET NUMBER	SHEET NAME	50% CD	90% CD	100% CD
M000	MECHANICAL LEGEND AND ABBREVIATIONS	X	X	X
M001	BASIS OF DESIGN AND TABULATED DATA	X	X	X
M002	SCHEDULES	X	X	X
M003	CALCULATIONS		X	X
M140	LEVEL 4 - OVERALL DEMO PLAN - HVAC	X	X	X
M141	LEVEL 4 - DEMO PLAN - HVAC ADD ALTERNATE	X	X	X
M230	LEVEL 3 - OVERALL FLOOR PLAN - HVAC			X
M240	LEVEL 4 - OVERALL FLOOR PLAN - HVAC	X	X	X
M241	LEVEL 4 - NORTH FLOOR PLAN - HVAC	X	X	X
M242	LEVEL 4 - SOUTH FLOOR PLAN - HVAC	X	X	X
M340	LEVEL 4 - OVERALL FLOOR PLAN - ZONING	X	X	X
M500	MECHANICAL SYSTEM SECTION VIEWS		X	X
M800	CONTROLS - SCHEMATICS		X	X
M801	CONTROLS - SEQUENCES OF OPERATION		X	X
M900	MECHANICAL DETAILS	X	X	X
M901	MECHANICAL DETAILS	X	X	X
Grand total: 16				

Portland State UNIVERSITY

PSU CAPITAL PROJECTS & CONSTRUCTION

RMNC

RICHARD & MAURINE NEUBERGER CENTER

4TH FLOOR SPHR INTERIOR REMODEL

PSU CAMPUS | BLOCK: 087
1600 SW 4TH AVENUE
PORTLAND, OREGON 97201

GLUMAC
A TETRA TECH COMPANY
900 SW Fifth Ave., Suite 1600
Portland, OR 97204
www.glumac.com
T. 503.227.5280
Project Manager: P. Hallowell
Job. No.: 150-26US00253

REGISTERED PROFESSIONAL ENGINEER
100672PE
OREGON
NOVEMBER 12, 2024
PAUL HALLOWELL
EXPIRES: 06/30/27

ISSUED FOR BID & PERMIT

9/4/2026

Sheet Title :

MECHANICAL LEGEND AND ABBREVIATIONS

Revisions :

Date :

Drawn : KC

Checked : WD

Sheet # :

M000

MECHANICAL - GENERAL NOTES

1. THESE GENERAL NOTES APPLY TO ALL SHEETS.
2. CONTRACT DOCUMENT DRAWINGS ARE DIAGRAMMATIC AND ARE INTENDED TO CONVEY SCOPE AND GENERAL ARRANGEMENT ONLY. DO NOT SCALE FOR MATERIAL QUANTITIES. ALL SCALING SHOULD BE REFERENCED TO ARCHITECTURAL PLANS ONLY.
3. COORDINATE CONSTRUCTION OF ALL MECHANICAL WORK WITH ALL OTHER DISCIPLINES AND AS SHOWN ON OTHER CONTRACT DOCUMENT DRAWINGS.
4. CONTRACTOR SHALL VISIT SITE AND VERIFY ALL EXISTING CONDITIONS AND CONNECTIONS TO EXISTING WORK PRIOR TO BIDDING AND CONSTRUCTION. THE CONTRACTOR SHALL PAY FOR AND REPAIR ALL DAMAGES CAUSED BY FAILURE TO EXACTLY LOCATE AND PRESERVE ANY AND ALL UNDERGROUND UTILITIES UNLESS OTHERWISE INDICATED.
5. CONTRACTOR SHALL OBTAIN AND PAY FOR ALL REQUIRED FEES, PERMITS AND INSPECTIONS. OBTAIN ALL FIELD APPROVALS ON WORK FROM REGULATING AGENCIES WHERE REQUIRED.
6. DURING ENTIRE CONSTRUCTION PERIOD MAINTAIN ADEQUATE FIRE EXTINGUISHERS READY FOR USE IN CASE OF FIRE.
7. PROTECTION OF PUBLIC: THE CONTRACTOR SHALL PROTECT THE PUBLIC FROM INJURY DURING THE WORK BY POSTING WARNING SIGNS, GUARD LIGHTS AND BARRICADES.
8. COORDINATE ALL WORK WITH OTHER TRADES AND AVOID IMPACTING ARCHITECTURAL AND STRUCTURAL MEMBERS. NO WORK SUCH AS PIPE, DUCTWORK, ETC., SHALL BE IN CONTACT WITH ANY EQUIPMENT OR BUILDING MEMBERS.
9. COORDINATE ALL CUTTING AND PATCHING WITH GENERAL CONTRACTOR AND OTHER DISCIPLINES. CONTRACTOR SHALL BE RESPONSIBLE FOR ALL CUTTING AND PATCHING RELATED TO THEIR WORK.
10. DRAWINGS THAT INDICATE EXISTING ITEMS FOR RELOCATION (ER) SHALL BE REMOVED, STORED, CLEANED, PROTECTED FROM DAMAGE AND INSTALLED IN NEW LOCATIONS AS INDICATED ON DRAWINGS.
11. OBTAIN WRITTEN PERMISSION OF STRUCTURAL ENGINEER BEFORE PROCEEDING WITH ANY CUTTING OR PATCHING OF STRUCTURAL SYSTEMS.
12. ALL ATTACHMENTS TO THE BUILDING STRUCTURE SHALL BE COORDINATED WITH THE STRUCTURAL DESIGN. ALL BRACING AND MOUNTING OF PIPES AND DUCTS SHALL MEET THE MINIMMUM REQUIREMENTS OF THE MOST RECENT SMACNA HVAC DUCT CONSTRUCTION STANDARDS-METAL AND FLEXIBLE. CONTRACTOR SHALL MAINTAIN ONE COPY OF THIS MANUAL ON SITE AT ALL TIMES FOR REVIEW AND ACCESS BY INSPECTORS AND OWNER'S REPRESENTATIVES.
13. REFER TO STRUCTURAL DESIGN FOR SEISMIC ATTACHMENT REQUIREMENTS PER THE BUILDING CODE. ALL SEISMIC RESTRAINTS OF PIPES AND DUCTS SHALL MEET THE MINIMMUM REQUIREMENTS OF THE MOST RECENT SMACNA SEISMIC RESTRAINT MANUAL. CONTRACTOR SHALL MAINTAIN ONE COPY ON SITE AT ALL TIMES FOR REVIEW AND ACCESS BY INSPECTORS AND OWNER'S REPRESENTATIVES.
14. THESE PLANS AND ACCOMPANYING SPECIFICATIONS HAVE BEEN DESIGNED TO SHOW SUBSTANTIAL COMPLIANCE WITH THE APPLICABLE BUILDING ENERGY EFFICIENCY CODE. ALL EQUIPMENT SHALL MEET THE REQUIREMENTS OF THE APPLICABLE BUILDING ENERGY EFFICIENCY CODE.
15. ALL SUPPLY AND RETURN AIR DUCTWORK SHALL BE INSULATED WITH NOT LESS THAN THE AMOUNT OF INSULATION INDICATED IN ACCORDANCE WITH THE APPLICABLE MECHANICAL CODE AND BUILDING ENERGY EFFICENCY CODE.
16. WHERE TWO OR MORE ITEMS OF THE SAME TYPE OF EQUIPMENT ARE REQUIRED, THE PRODUCT OF ONE MANUFACTURER SHALL BE USED.
17. REFER TO TYPICAL DETAILS FOR DUCTWORK, PIPING, AND EQUIPMENT INSTALLATION.
18. ALL DUCT HANGERS AND SUPPORTS SHALL COMPLY WITH THE MECHANICAL CODE AND THE "SMACNA HVAC DUCT CONSTRUCTION STANDARDS -METAL AND FLEXIBLE".
19. ALL SUPPLY, RETURN AND EXHAUST AIR DUCTWORK SHALL BE GALVANIZED SHEET METAL IN ACCORDANCE WITH MECHANICAL CODE, SMACNA HVAC DUCT CONSTRUCTION STANDARDS AND ASHRAE STANDARDS. DUCT GAUGE AND CONSTRUCTION SHALL BE SELECTED AT 1.5 TIMES THE DESIGN FAN SUPPLY STATIC, OR GREATER, TO ACCOMMODATE SYSTEM PRESSURE TESTING REQUIREMENTS AND FAN DEADHEAD STATIC. INSTALL TURNING VANES OR RADIUSED ELBOWS AT EACH RECTANGULAR SUPPLY ELBOW PER SPECIFICATION AND WHERE SHOWN ON DRAWINGS UNLESS NOTED OR SPECIFIED OTHERWISE.
20. DIMENSIONS AND SHAPE OF THE DUCT MAY BE ALTERED, AS LONG AS THE SAME AIR VELOCITY AND FLOW RATE ARE MAINTAINED, TO AVOID INTERFERENCES AND MAINTAIN ADEQUATE CLEARANCES.
21. ALL DUCTWORK DIMENSIONS, AS SHOWN ON THE DRAWINGS, ARE INTERNAL CLEAR DIMENSIONS AND DUCT SIZE SHALL BE INCREASED TO COMPENSATE FOR DUCT LINING THICKNESS.
22. SEAL ALL DUCT JOINTS, INCLUDING LONGITUDINAL JOINTS, WITH WATER BASED SEALANT. MAXIMUM ALLOWABLE DUCTWORK LEAKAGE SHALL NOT EXCEED 5% AND AS DEFINED ELSEWHERE IN DOCUMENTS.
23. IDENTIFY ALL NEW MECHANICAL EQUIPMENT WITH NAMEPLATES PERMANENTLY ENGRAVED WITH 1/2 INCH HIGH WHITE LETTERS ON A BLACK BACKGROUND. IDENTIFY EQUIPMENT WITH SYMBOLS SHOWN ON THE PLANS AND AREA SERVED DESCRIPTION.
24. INSTALL VOLUME DAMPERS WHERE SHOWN AND AS REQUIRED FOR PROPER BALANCING OF EACH DIFFUSER/GRILLE/REGISTER, INCLUDING DEVICES WITH OPPOSED BLADE DAMPERS. VOLUME DAMPERS SHALL BE MOUNTED IMMEDIATELY DOWNSTREAM OF BRANCH CONNECTIONS. PROVIDE EXTENDED REGULATORS, WITH CONCEALED COVER PLATES, TO OPERATE DAMPERS LOCATED ABOVE INACCESSIBLE CEILINGS.
25. CERTAIN ITEMS SUCH AS RISES AND DROPS IN DUCTWORK, ACCESS DOORS, VOLUME DAMPERS, ETC., ARE INDICATED ON THE CONTRACT DOCUMENT DRAWINGS FOR CLARITY FOR A SPECIFIC LOCATION REQUIREMENT AND SHALL NOT BE INTERPRETED AS THE EXTENT OF THE REQUIREMENTS FOR THESE ITEMS.
26. PROVIDE FLASHING AND COUNTERFLASHING FOR ALL PENETRATIONS THROUGH WALLS OR ROOF TO MAKE WATERPROOF INSTALLATION.
27. COORDINATE ALL SUPPLY DIFFUSERS AND RETURN GRILLES WITH CEILING GRID, LIGHTS, SPRINKLER HEADS, SEISMIC BRACING, TELEPHONE EQUIPMENT, AREA DETECTORS, ETC.
28. CEILING DIFFUSER SIZES SHOWN INDICATE NECK SIZES. PROVIDE FRAMES AS REQUIRED TO MATCH MOUNTING SURFACE.
29. DUCT SIZE SERVING DIFFUSERS AND GRILLES MUST BE EQUAL TO, OR GREATER THAN, THE NECK SIZE AREA UNLESS OTHERWISE NOTED ON THE DRAWINGS.
30. CONDENSATE PIPING SHALL BE TYPE L OR M COPPER TUBING WITH WROUGHT COPPER FITTINGS. A PRIMARY DRAIN PAN SHALL BE PROVIDED WITH COOLING COIL AND EXTEND BEYOND THE LEAVING SIDE OF THE COIL AND UNDERNEATH THE COOLING COIL CONNECTIONS. PROVIDE SECONDARY DRAIN PIPE FOR EQUIPMENT ABOVE CEILINGS AND ROUTE TO A READILY VISIBLE LOCATION.
31. SUPPORT ALL PIPING SO THAT IT IS FIRMLY HELD IN PLACE BY APPROVED IRON HANGERS AND SUPPORTS IN ACCORDANCE WITH RECOMMENDATIONS OF AMERICAN PIPE FITTERS ASSOCIATION AND PIPE HANGER INSTITUTE.
32. PROVIDE ALL MATERIALS AND EQUIPMENT AND PERFORM ALL LABOR REQUIRED TO INSTALL COMPLETE AND OPERABLE HVAC SYSTEMS AS INDICATED ON THE DRAWINGS, AS SPECIFIED AND AS REQUIRED BY CODE.
33. IN CORRIDORS WHERE CEILING SPEAKERS AND AIR DIFFUSERS ARE INDICATED BETWEEN THE SAME LIGHT FIXTURES, INSTALL BOTH DEVICES AT THE QUARTER POINTS BETWEEN THE SAME FIXTURE.
34. COORDINATE DIFFUSER, REGISTER, AND GRILLE LOCATIONS WITH ARCHITECTURAL REFLECTED CEILING PLANS, LIGHTING, AND OTHER CEILING ITEMS AND MAKE MINOR DUCT MODIFICATIONS TO SUIT.
35. LOCATE ALL MECHANICAL EQUIPMENT FOR UNOBSTRUCTED ACCESS TO UNIT ACCESS PANELS, CONTROLS AND VALVING.
36. PROVIDE FLEXIBLE CONNECTIONS IN ALL DUCTWORK SYSTEMS (SUPPLY, RETURN, AND EXHAUST) CONNECTED TO AIR HANDLING UNITS AND FANS. FLEXIBLE CONNECTIONS SHALL BE PROVIDED AT THE POINT OF CONNECTION TO THE EQUIPMENT UNLESS OTHERWISE INDICATED.
37. INDIVIDUAL RUNS OF FLEXIBLE DUCT SHALL NOT EXCEED FIVE (5) FEET.
38. ALL EQUIPMENT, PIPING, DUCTWORK, ETC., SHALL BE SUPPORTED AS DETAILED, SPECIFIED, AND REQUIRED TO PROVIDE A VIBRATION FREE INSTALLATION.
39. ALL EQUIPMENT SHALL BE ATTACHED AND ANCHORED PER THE APPLICABLE BUILDING CODE, MANUFACTURER'S INSTRUCTIONS AND STRUCTURAL DESIGN.
40. PROVIDE VIBRATION ISOLATION DEVICES FOR ALL MECHANICAL EQUIPMENT TO PREVENT TRANSMISSION OF VIBRATION TO BUILDING STRUCTURE.
41. ALL DUCTWORK SHALL BE COORDINATED WITH ALL TRADES INVOLVED. OFFSETS IN DUCTS, INCLUDING DIVIDED DUCTS AND TRANSITIONS AROUND OBSTRUCTIONS, SHALL BE PROVIDED AT NO ADDITIONAL COST TO THE OWNER.
42. PROVIDE ACCESS DOORS IN DUCTWORK TO PROVIDE ACCESS FOR ALL FANS, SMOKE DETECTORS, FIRE DAMPERS, SMOKE DAMPERS, VOLUME DAMPERS, HUMIDIFIERS, COILS, AND OTHER ITEMS LOCATED IN THE DUCTWORK WHICH REQUIRE OPERATION, ADJUSTMENT AND MAINTENANCE.
43. INSTALL ALL MECHANICAL EQUIPMENT AND APPURTENANCES IN ACCORDANCE WITH MANUFACTURERS' RECOMMENDATIONS, CONTRACT DOCUMENTS, AND APPLICABLE CODES AND REGULATIONS.
44. PROVIDE ACCESS DOORS IN DUCTWORK TO PROVIDE ACCESS FOR ALL FANS, SMOKE DETECTORS, FIRE DAMPERS, SMOKE DAMPERS, VOLUME DAMPERS, HUMIDIFIERS, COILS, AND OTHER ITEMS LOCATED IN THE DUCTWORK WHICH REQUIRE OPERATION, ADJUSTMENT AND MAINTENANCE.
45. INSTALL ALL MECHANICAL EQUIPMENT AND APPURTENANCES IN ACCORDANCE WITH MANUFACTURERS' RECOMMENDATIONS, CONTRACT DOCUMENTS, AND APPLICABLE CODES AND REGULATIONS.
46. LOCATE ALL TEMPERATURE, PRESSURE, AND FLOW MEASURING DEVICES IN ACCESSIBLE LOCATIONS WITH STRAIGHT SECTION OF PIPE OR DUCT UPSTREAM AND DOWNSTREAM AS RECOMMENDED BY THE MANUFACTURER FOR RATED ACCURACY.
47. UNLESS OTHERWISE SHOWN, LOCATE ALL ROOM TEMPERATURE SENSORS AND THERMOSTATS SUCH THAT OPERABLE PARTS ARE NO HIGHER THAN 48" ABOVE FINISHED FLOOR. NOTIFY THE OWNER'S REPRESENTATIVE OF ANY ROOMS WHERE THIS CANNOT BE MAINTAINED OR WHERE THERE IS A CONCERN ABOUT LOCATION. DO NOT MOUNT TEMPERATURE SENSORS ABOVE LIGHT SWITCHES.
48. COORDINATE ALL CONTROLS AND SEQUENCES OF OPERATION WITH THE BUILDING AUTOMATION SYSTEM (BAS). PROVIDE ALL DEVICES, CONTROLLERS, SENSORS, CONDUIT, WIRING AND LABOR TO PROVIDE A COMPLETE AND OPERATIONAL SYSTEM TO MEET THE OWNER'S PROJECT REQUIREMENTS AND THE DESIGN INDICATED ON THESE DRAWINGS AND SPECIFICATIONS.
49. ALL CONTROL CONDUIT AND WIRING SHALL COMPLY WITH THE ELECTRICAL CODE AND THE SPECIFICATIONS.
50. COORDINATE ALL EQUIPMENT CONNECTIONS WITH MANUFACTURERS ' CERTIFIED DRAWINGS. COORDINATE AND PROVIDE ALL DUCT AND PIPING TRANSITIONS REQUIRED FOR FINAL EQUIPMENT CONNECTIONS TO FURNISHED EQUIPMENT. FIELD VERIFY AND COORDINATE ALL DUCT AND PIPING DIMENSIONS BEFORE FABRICATION.
51. WHEN MECHANICAL WORK (HVAC, PLUMBING, SHEET METAL, FIRE PROTECTION, ETC.) IS SUBCONTRACTED, IT SHALL BE THE MECHANICAL CONTRACTOR'S RESPONSIBILITY TO COORDINATE SUBCONTRACTORS AND THE ASSOCIATED CONTRACTS. WHEN DISCREPANCIES ARISE PERTAINING TO WHICH CONTRACTOR PROVIDES A PARTICULAR ITEM OF THE MECHANICAL CONTRACT OR WHICH CONTRACTOR PROVIDES FINAL CONNECTIONS FOR A PARTICULAR ITEM OF THE MECHANICAL CONTRACT, IT SHALL BE BROUGHT TO THE ATTENTION OF THE MECHANICAL CONTRACTOR, WHOSE DECISION SHALL BE FINAL.
52. THE LOCATIONS OF ALL ITEMS SHOWN ON THE DRAWINGS OR CALLED FOR IN THE SPECIFICATIONS THAT ARE NOT DEFINITELY FIXED BY DIMENSIONS ARE APPROXIMATE ONLY. THE EXACT LOCATIONS NECESSARY TO SECURE THE BEST CONDITIONS AND RESULTS MUST BE DETERMINED BY THE PROJECT SITE CONDITIONS AND SHALL BE COORDINATED WITH THE OWNER'S REPRESENTATIVE PRIOR TO INSTALLATION. DO NOT SCALE DRAWINGS.
53. ALL MISCELLANEOUS STEEL REQUIRED TO ENSURE PROPER INSTALLATION AND AS SHOWN IN THE DETAILS FOR PIPING, DUCTWORK, AND EQUIPMENT (UNLESS OTHERWISE NOTED) SHALL BE FURNISHED AND INSTALLED BY THE MECHANICAL CONTRACTOR.
54. LOCATIONS AND SIZES OF ALL FLOOR AND WALL OPENINGS SHALL BE COORDINATED WITH ALL OTHER TRADES INVOLVED.
55. ALL PENETRATIONS THROUGH FIRE AND SMOKE RATED WALLS DUE TO DUCTWORK, PIPING, CONDUIT, ETC., SHALL BE FIRE AND SMOKE STOPPED WITH A UL APPROVED SEALANT SYSTEM.
56. ALL AIR CONDITIONING CONDENSATE DRAIN LINES FROM EACH AIR HANDLING UNIT SHALL BE PIPED FULL SIZE OF THE UNIT DRAIN OUTLET, WITH "P" TRAP, AND PIPED TO NEAREST DRAIN. SEE DETAILS SHOWN ON THE DRAWINGS OR THE CONTRACT SPECIFICATIONS FOR DEPTH OF AIR CONDITIONING CONDENSATE TRAP TO EXCEED UNIT STATIC PRESSURE. CONDENSATE DRAIN LINES SHALL NOT BE LESS THAN 3/4" INTERNAL DIAMETER OR EQUIPMENT DRAIN CONNECTION SIZE, WHICHEVER IS LARGER, AND SHALL NOT DECREASE IN SIZE FROM THE OUTLET OF THE DRAIN PAN CONNECTION TO THE PLACE OF CONDENSATE DISPOSAL. EQUIPMENT MANUFACTURER SHALL PROVIDE OUTLET SIZE TO ALIGN WITH CONDENSATE DRAIN SIZING TABLES IN THE MECHANICAL AND PLUMBING CODES. UNIT OUTLET SIZE SHALL BE MINIMUM 3/4" FOR EQUIPMENT CAPACITY TO 20 TON OF REFRIGERATION AND MINIMUM 1" FOR EQUIPMENT CAPACITY OVER 20 TONS TO 40 TONS OF REFRIGERATION.
57. EQUIPMENT AND APPLIANCES SHALL BE ACCESSIBLE FOR SERVICE, INSPECTION, REPAIR AND REPLACEMENT WITHOUT REMOVING PERMANENT CONSTRUCTION. SUFFICIENT CLEARANCE SHALL BE MAINTAINED TO PERMIT CLEANING, REPLACEMENT OF FILTERS, BLOWERS, MOTORS, CONTROLS AND LUBRICATION OF MOVING PARTS. MINIMUM OF 30 INCHES OF CLEARANCE IN DEPTH WIDTH AND HEIGHT SHALL BE PROVIDED TO SERVICE THE APPLIANCE OR EQUIPMENT.
58. PERMANENT LIGHTING FIXTURES SHALL BE INSTALLED FOR ALL EQUIPMENT AND APPLIANCES INSTALLED ABOVE PERMANENTLY CONSTRUCTED CEILING. CONTROL OF THE LIGHT FIXTURES SHALL BE PROVIDED AT THE ACCESS ENTRANCE.
59. ALL TESTS SHALL BE COMPLETED BEFORE ANY MECHANICAL EQUIPMENT OR PIPING INSULATION IS APPLIED.
60. BALANCE AIR FLOW AT ALL AIR INLETS AND OUTLETS TO AIR QUANTITIES SHOWN. MECHANICAL CONTRACTOR SHALL PROVIDE MOTORS, PULLEYS AND BELTS AS REQUIRED TO ACCOMMODATE THE REQUIRED AIR FLOWS. BALANCE ALL WATER FLOWS TO COILS AND MECHANICAL EQUIPMENT TO VALUES SHOWN. INSTALL TEST PLUGS WHERE NECESSARY. PROVIDE FIVE TYPED FINAL BALANCE REPORTS. BALANCING CONTRACTOR SHALL BE INDEPENDENT OF THE INSTALLING CONTRACTORS AND CERTIFIED BY THE NATIONAL ENVIRONMENTAL BALANCING BUREAU (NEBB) OR ASSOCIATED AIR BALANCE COUNCIL (AABC) WITH AT LEAST THREE YEARS OF EXPERIENCE.
61. ALL EXPOSED PIPE, PIPE SUPPORTS, DUCTWORK, UNFINISHED EQUIPMENT AND DUCT SUPPORTS SHALL MATCH ADJACENT FINISHES AS REQUIRED BY PAINTING SPECIFICATION AND ARCHITECTURAL DRAWINGS.
62. RESTORE ALL DAMAGE RESULTING FROM YOUR WORK AND LEAVE PREMISES IN CLEAN CONDITION WHEN FINISHED WITH WORK.
63. GUARANTEE ALL WORK AND MATERIALS FOR ONE YEAR (MINIMUM) FROM DATE OF CERTIFICATE OF OCCUPANCY.
64. AT COMPLETION OF CONSTRUCTION PROVIDE AS-BUILT DRAWINGS AND COPIES OF BOUND OPERATIONS AND MAINTENANCE MANUALS.
65. A COPY OF THE MANUFACTURERS INSTALLATION INSTRUCTIONS SHALL BE PROVIDED AT THE LOCATION OF EACH PIECE OF EQUIPMENT.
66. REFER TO ARCHITECTURAL PLANS FOR DOOR SCHEDULE WITH DOOR GRILLES AND/OR UNDERCUT DOORS THAT ARE USED FOR TRANSFER AIR.
67. ALL MECHANICAL AND ELECTRICAL EQUIPMENT SHALL BE ANCHORED OR BRACED TO MEET THE HORIZONTAL AND VERTICAL FORCES PRESCRIBED IN THE APPLICABLE SECTIONS OF THE BUILDING CODE AND ASCE 7.
68. THE ATTACHMENT OF THE FOLLOWING ITEMS SHALL RESIST THE ASSIGNED FORCES, BUT NEED NOT BE DETAILED ON THE PLANS, AND THE PROJECT INSPECTOR WILL VERIFY THAT THESE ITEMS (EQUIPMENT) HAVE BEEN ANCHORED.
    A. EQUIPMENT WEIGHING LESS THAN 400 POUNDS SUPPORTED DIRECTLY ON THE FLOOR OR ROOF.
    B. FURNITURE REQUIRED TO BE ATTACHED IN ACCORDANCE WITH ASCE 7, SECTION 13.5.
    C. TEMPORARY OR MOVABLE EQUIPMENT WITH FLEXIBLE CONNECTION TO POWER OR UTILITIES.
    D. EQUIPMENT WEIGHING LESS THAN 20 POUNDS SUPPORTED BY VIBRATION ISOLATORS.
    E. EQUIPMENT WEIGHING LESS THAN 20 POUNDS SUSPENDED FROM A ROOF OR FLOOR OR HUNG FROM A WALL.
69. ALL MATERIALS, INCLUDING SEALANTS AND ADHESIVES SHALL HAVE A FLAME SPREAD INDEX OF 25, OR LESS, AND SMOKE DEVELOPMENT INDEX OF 50, OR LESS, IN ACCORDANCE WITH NFPA 255, ASTM-E-84, UL-181 AND UL-723.
70. AT THE TIME OF ROUGH INSTALLATION AND DURING STORAGE ON THE CONSTRUCTION SITE UNTIL FINAL STARTUP OF THE HEATING, COOLING AND VENTILATING EQUIPMENT, ALL DUCT AND OTHER RELATED AIR DISTRIBUTION COMPONENT OPENINGS SHALL BE COVERED WITH TAPE, PLASTIC, SHEETMETAL OR OTHER METHODS ACCEPTABLE TO THE ENFORCING AGENCY TO REDUCE THE AMOUNT OF DUST, WATER AND DEBRIS WHICH MAY ENTER THE SYSTEM.
71. REFRIGERANT SYSTEM CHARGE VALUES ARE BASED ON SELECTIONS FROM MANUFACTURER AND APPROXIMATE REFRIGERANT PIPE LENGTHS.
72. REFRIGERANT PIPING EXPOSED TO WEATHER SHALL BE PROVIDED WITH A WATER RETARDANT COVER OVER THE INSULATION TO PROVIDE SHIELDING FROM SOLAR RADIATION AND TO PREVENT DEGRADATION OF THE MATERIAL. ADHESIVE TAPE SHALL NOT BE USED TO PROVIDE THIS PROTECTION.

MECHANICAL - BASIS OF DESIGN

A. THIS PROJECT INCLUDES A FOURTH FLOOR, ~13,200 SF TI FOR THE PSU SPEECH AND HEARING DEPARTMENT. AN EXISTING DUAL DUCT SYSTEM SERVED FROM AN AHU IN THE PENTHOUSE SHALL BE UTILIZED TO PROVIDE CONDITIONING AND VENTILATION TO THIS FLOOR. ONE EXISTING SPLIT SYSTEM SERVING THE ELECTRICAL ROOM SHALL BE REUSED. NEW DUAL DUCT TERMINAL UNITS AND ASSOCIATED MEDIUM AND LOW PRESSURE DUCT DISTRIBUTION WILL BE PROVIDED TO ALIGN WITH THE NEW PROGRAMMING. THE EXISTING DUAL DUCT TERMINAL UNITS SERVING THE LEVEL ABOVE SHALL BE REUSED. THE DESIGN INCLUDES THE FOLLOWING NOTABLE FEATURES, BUT IS NOT LIMITED TO THIS SCOPE. CONTRACTOR IS RESPONSIBLE FOR REVIEWING ALL CONTRACT DOCUMENTS AND COORDINATING WITH ALL DISCIPLINES.
    1. AIR DISTRIBUTION: SUPPLY AIR IS DUAL DUCT, VARIABLE VOLUME AND DISTRIBUTED TO EACH UNIQUE THERMAL ZONE VIA MEDIUM PRESSURE DUCTWORK. THE RETURN AIR DUCTWORK UTILIZES THE CEILING SPACE AS A RETURN AIR PLENUM.
    2. ELECTRICAL ROOM COOLING: SPLIT SYSTEM DIRECT EXPANSION REFRIGERATION SYSTEM.
    3. CONTROLS: EXISTING BUILDING AUTOMATION SYSTEM (BAS) TO OPERATE ALL SYSTEM FUNCTIONS AND SCHEDULES.
B. CODES AND STANDARDS (LATEST EDITIONS UNLESS OTHERWISE REQUIRED BY AHJ)
    1. PSU TECHNICAL DESIGN STANDARDS - REVISION 6, JULY 2025
    2. OREGON BUILDING CODES ENFORCED BY THE AUTHORITY HAVING JURISDICTION (AHJ):
        a. 2025 OREGON MECHANICAL SPECIALTY CODE (OMSC) BASED ON THE 2024 INTERNATIONAL MECHANICAL CODE (IMC) AND THE 2024 INTERNATIONAL FUEL GAS CODE (IFGC) WITH STATE AMENDMENTS.
        b. 2025 OREGON STRUCTURAL SPECIALTY CODE (OSSC) BASED ON THE 2024 INTERNATIONAL BUILDING CODE (IBC).
        c. 2023 OREGON PLUMBING SPECIALTY CODE (OPSC) BASED ON THE 2021 UNIFORM PLUMBING CODE (UPC).
        d. 2023 OREGON ELECTRICAL SPECIALTY CODE (BASED ON THE 2023 NATIONAL ELECTRICAL CODE (NEC) WITH STATE AMENDMENTS.
        e. 2025 OREGON ENERGY EFFICIENCY SPECIALTY CODE (OEESC) BASED ON THE ASHRAE STANDARD 90.1-2012.
    3. AMERICANS WITH DISABILITIES ACT (ADA).
    4. ASHRAE 2026 HANDBOOK, REFRIGERATION.
    5. ASHRAE 2025 HANDBOOK, FUNDAMENTALS.
    6. ASHRAE 2024 HANDBOOK, HVAC SYSTEMS AND EQUIPMENT.
    7. ASHRAE 2023 HANDBOOK, HVAC APPLICATIONS.
    8. ASHRAE 55-2023 THERMAL ENVIRONMENTAL CONDITIONS FOR HUMAN OCCUPANCY.
    9. ASHRAE 62.1-2025 VENTILATION FOR ACCEPTABLE INDOOR AIR QUALITY.
    10. ASHRAE 90.1-2025 ENERGY STANDARD FOR BUILDINGS EXCEPT LOW-RISE RESIDENTIAL BUILDINGS.
    11. NFPA 90A: 2021 STANDARD FOR THE INSTALLATION OF AIR-CONDITIONING AND VENTILATING SYSTEMS.
    12. NFPA 90B: 2021 STANDARD FOR THE INSTALLATION OF WARM AIR HEATING AND AIR-CONDITIONING SYSTEMS.
    13. NFPA 99: 2021 HEALTH CARE FACILITIES CODE.
    14. NFPA 101: 2021 LIFE SAFETY CODE.
C. OUTDOOR DESIGN CONDITIONS:
    1. LOCATION: PORTLAND, OR
    2. SUMMER: 92.4°F DB/67.5°F WB
    3. WINTER: 26.5°F
    4. ELEVATION: 22 FEET ABOVE SEA LEVEL.
    5. CLIMATE ZONE: 4C
D. INDOOR DESIGN CONDITIONS: BASED ON +/-2°F CONTROL ACCURACY FROM SETPOINTS.
    1. ALL CONDITIONED AREAS:
        a. COOLING: 76°F
        b. HEATING: 68°F
    2. EXCEPTIONS:
        a. ELECTRICAL EQUIPMENT ROOMS: 85°F (MAXIMUM)
    3. HUMIDITY CONTROL
        a. ALL AREAS, UNLESS OTHERWISE NOTED: NONE. NO ACTIVE HUMIDIFICATION SYSTEMS.
E. EXISTING SUPPLY AIR TEMPERATURES. VALUES DERIVED THROUGH COORDINATION WITH HMS.
    1. COLD DECK: 55°F
    2. HOT DECK: 85°F
F. OREGON VENTILATION CRITERIA:
    1. COMPLY WITH CHAPTER 4 OF OMSC/IMC OR ASHRAE 62.1.
G. EXHAUST TO OUTDOORS (MINIMUM RATES):
    1. TOILET ROOMS: 12 AIR CHANGES PER HOUR OR 75 CFM/FIXTURE, WHICHEVER IS GREATER.
    2. JANITOR CLOSET: 50 CFM, 1 CFM/SF OR 10 AIR CHANGES PER HOUR, WHICHEVER IS GREATER.
    3. BREAK ROOM: 100 CFM, MINIMUM.
    4. COPIER/PRINTER ROOMS: 1 CFM/SF OR 2 AIR CHANGES PER HOUR, WHICHEVER IS GREATER.
H. BUILDING ENVELOPE:
    EXISTING ENVELOPE DATA WAS NOT AVAILABLE. PERFORMANCE WAS DERIVED FROM 2000 IECC. CONFIRM WITH PROJECT ARCHITECT AND OWNER.
    1. GLAZING: GLASS/FRAME COMBINATION:
        a. CURTAIN WALL:
            1. OVERALL U-VALUE = 0.7
            2. SHADING COEFFICIENT = 0.46
    2. WALL CONSTRUCTION:
        1. OVERALL U-VALUE = 0.186
I. INTERNAL HEAT GAINS:
    1. LIGHTING:
        a. OFFICE: 0.73 W/SQ.FT.
        b. CONFERENCE ROOM: 0.73 W/SQ.FT.
        c. RECEPTION: 0.8 W/SQ.FT.
        d. CORRIDOR: 0.44 W/SQ.FT.
        e. STORAGE: 0.34 W/SQ.FT.
        f. ELEVATOR LOBBY: 0.64 W/SQ.FT.
        g. ZOOM ROOM: 1.23 W/SQ.FT.
        h. BREAKROOM: 0.55 W/SQ.FT.
        i. RESTROOM: 0.74 W/SQ.FT.
        j. RESEARCH LABORATORY: 1.05 W/SQ.FT.
        k. SECURITY: 0.75 W/SQ.FT.
        l. SEMINAR ROOM: 0.72 W/SQ.FT.
    2. EQUIPMENT LOAD:
        a. PRIVATE OFFICES/CLINIC/RECEPTION/RESEARCH LABORATORY: 0.5 W/SQ.FT.
        b. CONFERENCE/MEETING/VIEW/ZOOM ROOMS: 1.5 W/SQ.FT.
        c. BREAKROOM/SECURITY: 4.2 W/SQ.FT.
        d. LOUNGE: 2.5 W/SQ.FT.
        e. SEMINAR ROOM: 1.6 W/SQ.FT.
        f. FACULTY OFFICE: 2 W/SQ.FT.
    3. ELECTRICAL TRANSFORMERS: 2% LOSS, 75 KVA
    4. IT/AV ROOMS: 36,000 BTUH
    5. OCCUPANCY CRITERIA IN OREGON:
        a. TYPICAL OCCUPANT: 250 BTUH SENSIBLE/200 BTUH LATENT
        b. SEMINAR OCCUPANT: 245 BTUH SENSIBLE/145 BTUH LATENT
        c. FACULTY OFFICE: 5 PEOPLE
        d. PRIVATE OFFICE/ZOOM ROOM: 1 PERSON
        e. CLINIC ROOM: 2 PEOPLE
        f. MEETING/STUDY ROOM: 4 PEOPLE
        g. VIEWING ROOM: 5 PEOPLE
        h. RECEPTION AREA: 1 PERSON/33.3 SQ.FT.
        i. CONFERENCE/LOUNGE/BREAKROOM: 1 PERSON/20 SQ.FT.
        j. CORRIDOR/ELEVATOR LOBBY: 0 PEOPLE
        k. SEMINAR ROOM: 1 PERSON/15.4 SQ.FT.
        l. RESEARCH LABORATORY: 1 PERSON/20 SQ.FT.
        m. STORAGE ROOM: 1 PERSON/500 SQ.FT.
        n. SECURITY ROOM: 1 PERSON/16.7 SQ.FT.
    6. ZONING CRITERIA:
        a. PRIVATE OFFICES: ONE ZONE (TEMPERATURE SENSOR) PER FOUR (MAXIMUM) PRIVATE OFFICES AND ONE PER EACH CORNER/EXECUTIVE OFFICE.
        b. CONFERENCE ROOMS: ONE ZONE (TEMPERATURE SENSOR) PER ROOM
        c. LOBBY: ONE ZONE (TEMPERATURE SENSOR)
        d. TELECOM: ONE ZONE (TEMPERATURE SENSOR) PER ROOM
        e. CLASSROOM: ONE ZONE (TEMPERATURE SENSORS) PER ROOM
        f. RESEARCH LABORATORY: ONE ZONE (TEMPERATURE SENSOR) PER TWO (MAXIMUM) RESEARCH LABORATORIES
J. DUCTWORK DESIGN CRITERIA:
    1. DESIGN DUCTWORK TO PROVIDE HIGH EFFICIENCY OPERATION WITH MINIMAL ACOUSTICAL NOISE. LOW PRESSURE SUPPLY DUCT STATIC PRESSURE FRICTION LOSS BASED ON A MAXIMUM OF 0.08" PER 100 FEET. LOW PRESSURE EXHAUST DUCT STATIC PRESSURE FRICTION LOSS BASED ON A MAXIMUM OF 0.06" PER 100 FEET. MEDIUM PRESSURE DUCTWORK SHALL NOT EXCEED A DUCT STATIC PRESSURE FRICTION LOSS BASED ON A MAXIMUM OF 0.15" PER 100 FEET.
    2. MAXIMUM SUPPLY, RETURN AND EXHAUST DUCT AIR FLOW VELOCITIES, REGARDLESS OF PRESSURE DROP, SHALL NOT EXCEED THE FOLLOWING CRITERIA:
        a. SPACE CRITERIA: NC 45
            - MAINS ABOVE CEILING: 2500 FPM
            - MAINS ABOVE OPEN OCCUPIED SPACES: 2000 FPM
            - BRANCHES ABOVE CEILING: 1400 FPM
            - BRANCHES ABOVE OPEN OCCUPIED SPACES: 1150 FPM
            - RUN-OUTS TO DIFFUSERS: 625 FPM
            - TRANSFER DUCTS: 400 FPM
        b. SPACE CRITERIA: NC 45-35
            - MAINS ABOVE CEILING: 1750 FPM
            - MAINS ABOVE OPEN OCCUPIED SPACES: 1450 FPM
            - BRANCHES ABOVE CEILING: 1400 FPM
            - BRANCHES ABOVE OPEN OCCUPIED SPACES: 1150 FPM
            - RUN-OUTS TO DIFFUSERS: 725 FPM
            - TRANSFER DUCTS: 400 FPM
        c. SPACE CRITERIA: NC 25-30
            - MAINS AND BRANCHES ABOVE CEILING: 1200 FPM
            - MAINS AND BRANCHES ABOVE OPEN OCCUPIED SPACES: 950 FPM
            - RUN-OUTS TO DIFFUSERS: 725 FPM
            - TRANSFER DUCTS: 400 FPM
K. ACOUSTICAL:
    1. THE FOLLOWING NOISE NC/RC CRITERIA LEVEL WILL BE TARGETED AS INDICATED IN THE PROJECT ACOUSTICAL REPORT. THESE LEVELS ADDRESS THE MECHANIC

DUAL DUCT VARIABLE AIR VOLUME TERMINAL UNIT SCHEDULE

PHASE	TAG	#	MANUFACTURER	MODEL	AREA SERVED	LOCATION	COLD INLET SIZE (IN)	HOT INLET SIZE (IN)	AIRFLOW CFM			COLD AIR P.D. (IN WG)	HOT AIR P.D. (IN WG)	COLD DAMPER CONFIG (NO/NC)	HEATER DAMPER CONFIG (NO/NC)	MAX DIS (NC)	UNIT SIZE (L"xW"xH")	OPER. WT. (LBS)	NOTES
									COOL MAX (CFM)	BOX MIN (CFM)	HEAT MAX (CFM)								
(E)																			
(E)	TU	330	-	-	L4 WEST PERIMETER	L3 SW PERIMETER	8	8	750	0	750	-	-	NO	NC	-	43x41x12	-	9
(E)	TU	331	-	-	L4 SOUTH PERIMETER	L3 SOUTH PERIMETER	10	10	900	0	900	-	-	NO	NC	-	48x49x14	-	9
(E)	TU	332	-	-	L4 EAST PERIMETER	L3 SE PERIMETER	8	8	750	0	750	-	-	NO	NC	-	43x41x12	-	9
(E)	TU	333	-	-	L4 EAST PERIMETER	L3 NE PERIMETER	8	8	750	0	750	-	-	NO	NC	-	43x41x12	-	9
(E)	TU	334	-	-	L4 NORTH PERIMETER	L3 NORTH PERIMETER	10	10	900	0	900	-	-	NO	NC	-	48x49x14	-	9
(E)	TU	335	-	-	L4 WEST PERIMETER	L3 NW PERIMETER	8	8	750	0	750	-	-	NO	NC	-	43x41x12	-	9
(E)	TU	430	-	-	L5 SOUTH PERIMETER	OFFICE 445	10	10	900	0	900	-	-	NO	NC	-	48x49x14	-	9
(E)	TU	431	-	-	L5 WEST PERIMETER	OFFICE 452	8	8	750	0	750	-	-	NO	NC	-	43x41x12	-	9
(E)	TU	432	-	-	L5 WEST PERIMETER	SEMINAR 465	8	8	750	0	750	-	-	NO	NC	-	43x41x12	-	9
(E)	TU	433	-	-	L5 NORTH PERIMETER	STUDENT VIEWING 467	10	10	900	0	900	-	-	NO	NC	-	48x49x14	-	9
(E)	TU	434	-	-	L5 EAST PERIMETER	CLINIC 422	8	8	750	0	750	-	-	NO	NC	-	43x41x12	-	9
(E)	TU	435	-	-	L5 EAST PERIMETER	OFFICE 435	8	8	750	0	750	-	-	NO	NC	-	43x41x12	-	9
(N)																			
(N)	TU	401	PRICE	DDS	SEMINAR 466	SEMINAR 466	12	10	1490	75	900	0.5	0.5	NO	NC	20	33x33x15	80	1,2,3,4,5,6,7
(N)	TU	402	PRICE	DDS	STUDENT VIEWING 467	CORRIDOR 424	8	8	360	115	315	0.5	0.5	NO	NC	-	23x20x10	50	1,2,3,4,5,6,7
(N)	TU	403	PRICE	DDS	GROUP ROOM 409	GROUP ROOM 409	8	8	405	195	265	0.5	0.5	NO	NC	20	23x20x10	50	1,2,3,4,5,6,7
(N)	TU	404	PRICE	DDS	NORTH PERIMETER CLINICS	CORRIDOR 411	8	8	300	65	585	0.5	0.5	NO	NC	24	23x20x10	50	1,2,3,4,5,6,7
(N)	TU	405	PRICE	DDS	EAST INTERIOR CLINICS	AUDI CLINIC 424	8	8	325	205	205	0.5	0.5	NO	NC	-	23x20x10	50	1,2,3,4,5,6,7
(N)	TU	406	PRICE	DDS	NORTH EAST PERIMETER CLINICS	CORRIDOR 411	12	8	725	90	475	0.5	0.5	NO	NC	25	25x28x13	60	1,2,3,4,5,6,7
(N)	TU	407	PRICE	DDS	EAST MIDDLE CLINICS	ADMIN OFFICE 426	12	8	715	80	475	0.5	0.5	NO	NC	25	25x28x13	80	1,2,3,4,5,6,7,8
(N)	TU	408	PRICE	DDS	RECEPTION 428	RECEPTION 428	10	8	730	330	330	0.5	0.5	NO	NC	22	25x28x13	60	1,2,3,4,5,6,7
(N)	TU	409	PRICE	DDS	ADJUNCT OFFICE 431	ADJUNCT OFFICE 431	6	6	235	145	145	0.5	0.5	NO	NC	22	23x20x10	35	1,2,3,4,5,6,7
(N)	TU	410	PRICE	DDS	EAST OFFICES	CONFERENCE 433	10	8	690	145	390	0.5	0.5	NO	NC	21	23x24x13	60	1,2,3,4,5,6,7
(N)	TU	411	PRICE	DDS	MIDDLE RESEARCH LABS	RESEARCH 432	8	8	365	310	310	0.5	0.5	NO	NC	21	23x20x10	50	1,2,3,4,5,6,7
(N)	TU	412	PRICE	DDS	EAST OFFICES	OFFICE 437	12	8	705	75	470	0.5	0.5	NO	NC	25	33x33x15	80	1,2,3,4,5,6,7,8
(N)	TU	413	PRICE	DDS	SOUTH EAST RESEARCH LABS	RESEARCH 440	8	8	325	290	290	0.5	0.5	NO	NC	25	23x20x10	50	1,2,3,4,5,6,7
(N)	TU	414	PRICE	DDS	CONFERENCE 438	CONFERENCE 438	10	8	595	115	485	0.5	0.5	NO	NC	24	23x24x13	60	1,2,3,4,5,6,7
(N)	TU	415	PRICE	DDS	SOUTH OFFICES	OFFICE 443	14	8	850	75	495	0.5	0.5	NO	NC	29	33x33x15	110	1,2,3,4,5,6,7
(N)	TU	416	PRICE	DDS	SOUTH OFFICES	OFFICE 448	14	8	850	75	495	0.5	0.5	NO	NC	29	37x40x18	110	1,2,3,4,5,6,7,8
(N)	TU	417	PRICE	DDS	WEST OFFICES	OFFICE 451	12	8	665	75	340	0.5	0.5	NO	NC	22	33x33x15	80	1,2,3,4,5,6,7
(N)	TU	418	PRICE	DDS	SOUTH WEST OFFICES	OFFICE 446	8	8	330	290	290	0.5	0.5	NO	NC	25	23x20x10	50	1,2,3,4,5,6,7
(N)	TU	419	PRICE	DDS	MIDDLE RESEARCH LABS	OFFICE 456	6	6	235	195	195	0.5	0.5	NO	NC	28	23x20x10	35	1,2,3,4,5,6,7
(N)	TU	420	PRICE	DDS	SOUTH OFFICES	STUDENT STUDY AREA 460	14	10	1345	125	670	0.5	0.5	NO	NC	25	33x33x15	110	1,2,3,4,5,6,7
(N)	TU	421	PRICE	DDS	STUDENT STUDY AREA 460	STUDENT STUDY AREA 460	14	8	1690	430	430	0.5	0.5	NO	NC	28	33x33x15	110	1,2,3,4,5,6,7
(N)	TU	422	PRICE	DDS	WORKROOMS 464	WORKROOMS 464	10	8	765	175	265	0.5	0.5	NO	NC	21	25x28x13	60	1,2,3,4,5,6,7,8
(N)	TU	423	PRICE	DDS	SEMINAR 465	SEMINAR 465	12	8	1200	70	330	0.5	0.5	NO	NC	22	33x33x15	80	1,2,3,4,5,6,7
(N)	TU	424	PRICE	DDS	STUDENT VIEWING ROOMS	STUDENT VIEWING ROOM 412	8	8	355	295	295	0.5	0.5	NO	NC	25	23x20x10	50	1,2,3,4,5,6,7,8
(N)	TU	425	PRICE	DDS	OFFICE 449	OFFICE 449	10	8	590	30	495	0.5	0.5	NO	NC	24	23x24x13	60	1,2,3,4,5,6,7

NOTES:
1. PROVIDE PRESSURE INDEPENDENT TERMINAL UNIT.
2. SEE SCHEDULED VALUE FOR MAXIMUM DISCHARGE SOUND LEVELS AT 0.5" STATIC PD. NOISE RATING IN ACCORDANCE WITH ARI STANDARD 880.
3. PROVIDE NEMA 1 CONTROLS ENCLOSURE.
4. COORDINATE CONTROLS WITH EXISTING BUILDING AUTOMATION SYSTEM.
5. PROVIDE UL CLASS II 24VAC TRANSFORMER AS REQUIRED. COORDINATE WITH ELECTRICAL FOR LINE VOLTAGE POWER.
6. TERMINAL CABINET SHALL INCLUDE 3/4" MINIMUM INTERNAL INSULATION LINING. TYPE SHALL BE FIBER-FREE OR FOIL FACED FIBERGLASS.
7. DUAL DUCT UNITS SHALL BE PROVIDED WITH BOTTOM MOUNTED CONTROLS ACCESSIBLE FROM UNDERNEATH THE UNIT.
8. PROVIDE EXTERNAL ACOUSTICAL LAGGING.
9. EXISTING DUAL DUCT TERMINAL TO REMAIN AND UTILIZE EXISTING CONTROLS. AIRFLOWS LISTED ARE FROM BUILDING AS-BUILTS.

FIRE SMOKE DAMPER SCHEDULE

TAG	#	MANUFACTURER	LOCATION	SYSTEM SERVED	SIZE WIDTH (IN.)	SIZE HEIGHT (IN.)	AIRFLOW (CFM)	ELECTRICAL			NOTES
								VOLTS	PHASE	GENSET POWER (Y/N)	
FSD	401	RUSKIN	MENS 403	LEVEL 4 EXHAUST	18	8	660	120	1	Yes	1,2,3,4

NOTES:
1. REFER TO SPECIFICATIONS FOR ADDITIONAL DAMPER REQUIREMENTS.
2. DAMPER ACTUATOR TO BE LOCATED OUTSIDE OF AIRSTREAM.
3. ELECTRIC ACTUATOR MOTOR INTERLOCKED WITH FIRE ALAM SYSTEM. COORDINATE WITH ELECTRICAL DESIGN.
4. PROVIDE OPTIONAL TEST SWITCH FOR REMOTE TESTING OF DAMPER (NORMAL, CLOSED AND OVERRIDE SWITCH) AND INDICATOR LIGHTS FOR OPEN AND CLOSED DAMPER POSITIONS.

EXISTING SPLIT SYSTEM AIR CONDITIONING FAN COIL SCHEDULE

PHASE	TAG	#	MANUFACTURER	MODEL	AREA SERVED	LOCATION	COOLING CAPACITY	SUPPLY		ELECTRICAL				UNIT SIZE (L"xW"xH")	OPER. WT. (LBS)	NOTES
							TOTAL (MBH)	AIR FLOW (CFM)	ESP (IN WG)	HP	VOLTS	PHASE	FLA (A)			
(E)	AC	401	TRANE	2TEC3F36B1000A	TECH 406	CORRIDOR	36	1174	0.5	1/3	208	1	4.1	47x24x24	140	ALL

NOTES:
1. REUSE EXISTING SPLIT SYSTEM UNIT FOR NEW TELECOM SPACE.
2. OUTDOOR UNIT IS LOCATED IN THE GARAGE BELOW THE BUILDING.
3. PROVIDE DES CHAMPS CONDENSATE AIR-TRAP WITH TRANSPARENT BODY FOR VISUAL INSPECTION. SIZE FOR CAPACITY AND STATIC PRESSURE REQUIREMENTS.

CONDENSATE PUMP SCHEDULE

TAG	#	MANUFACTURER	MODEL	AREA SERVED	LOCATION	EQUIPMENT SERVED		HZ	FLOW (GPM)	HEAD (FT WG)	ELECTRICAL				NOTES
						TAG	#				VOLTS	PHASE	SEPARATE POINT OF CONNECTION	GENSET POWER (Y/N)	
CP	401	LITTLE GIANT	VCMA-20ULS-C-PRO	TELECOM ROOM	HALLWAY	AC	401	60	10	20	115	1	Yes	No	ALL

NOTES:
1. COORDINATE WITH ELECTRICAL FOR POWER AND DISCONNECT AS REQUIRED.
2. MECHANICAL CONTRACTOR TO PROVIDE AS AN INTEGRAL ACCESSORY TO EQUIPMENT SERVED.
3. MECHANICAL CONTRACTOR TO PROVIDE AS STAND ALONE UNIT.
4. CONDENSATE PUMP SHALL BE EQUIPPED WITH OVERFLOW PROTECTION SWITCH, TIED TO BAS FOR UNIT SHUTDOWN.

AIR TERMINAL SCHEDULE

TAG	MANUFACTURER	MODEL	DESCRIPTION	FACE TYPE	FACE SIZE	COLOR	MATERIAL	OBD	NOTES
EA	TITUS	PAR	SQUARE CEILING EXHAUST	PERFORATED	24"x24"	WHITE	STEEL	NO	1,2,3,4,5,6
EB	TITUS	PAR	SQUARE CEILING EXHAUST	PERFORATED	12"x12"	WHITE	STEEL	NO	1,2,3,4,5,6
RA	TITUS	PAR	SQUARE CEILING RETURN	PERFORATED PANEL	24"x24"	WHITE	STEEL	NO	1,2,3,4,5,6
RB	TITUS	PAR	SQUARE CEILING RETURN	PERFORATED PANEL	12"x12"	WHITE	STEEL	NO	1,2,3,4,5,6
SA	TITUS	OMNI	SQUARE CEILING SUPPLY	SUPPLY PLAQUE	24"x24"	WHITE	STEEL	NO	1,2,3,4,5,6
SB	TITUS	OMNI	SQUARE CEILING SUPPLY	SUPPLY PLAQUE	12"x12"	WHITE	STEEL	NO	1,2,3,4,5,6

NOTES:
1. MAXIMUM TOTAL PRESSURE DROP SHALL NOT EXCEED 0.15" WG WITH DUCT TRANSITION.
2. MAXIMUM NC LEVEL SHALL BE 8 NC BELOW SOUND PERFORMANCE REQUIREMENTS FOR EACH SPACE.
3. ALL VISIBLE SURFACES AND DUCTWORK BEHIND FACE SHALL BE PAINTED FLAT BLACK.
4. COORDINATE WITH ARCHITECTURAL REFLECTED CEILING PLANS FOR BORDER TYPES.
5. NECK SIZE AND CFM SHOWN ARE ON PLANS (EXAMPLE: SA12x12-400 REFERS TO TAG "SA" WITH 12x12 NECK AND 400 CFM).
6. PROVIDE RECTANGULAR/SQUARE TO ROUND TRANSITION AS REQUIRED AND SIZED FOR MAXIMUM 0.01" WG TOTAL PRESSURE DROP.

Portland State UNIVERSITY

PSU CAPITAL PROJECTS & CONSTRUCTION

RMNC

RICHARD & MAURINE NEUBERGER CENTER

4TH FLOOR SPHR INTERIOR REMODEL

PSU CAMPUS | BLOCK: 087
1600 SW 4TH AVENUE
PORTLAND, OREGON 97201

GLUMAC
A TETRA TECH COMPANY
900 SW Fifth Ave., Suite 1600
Portland, OR 97204
www.glumac.com
T. 503.227.5280
Project Manager: P. Hallowell
Job. No.: 150-26US00253

REGISTERED PROFESSIONAL ENGINEER
100672PE
OREGON
NOVEMBER 12, 2024
PAUL HALLOWELL
EXPIRES: 06/30/27

ISSUED FOR BID & PERMIT

9/4/2026

Sheet Title :
SCHEDULES

Revisions :

Date :

Drawn : KC

Checked : WD

Sheet # :

M002

OUTDOOR AIR CALCULATION - MULTIPLE-ZONE RECIRCULATING SYSTEM METHOD

SYSTEM: AHU-1

BASED ON ASHRAE 62.1-2022

ROOM #	ZONE	CATEGORY	AREA (SF)	TABLE 6-1 OUTDOOR AIR (CFM/SF)	TABLE 6-1 OCCUPANCY (P/1000 SF)	CALCULATED OCCUPANTS	OVERRIDE # OCCUPANTS/ # FIXTURES	NUMBER OF # OCCUPANTS / FIXTURES	OUTDOOR AIR REQ. (CFM/PERSON)	EXHAUST RATE REQ. (CFM/SF)	(Rp X Pz)	(Ra X Az)	BREATHING ZONE OUTDOOR AIRFLOW (CFM) Vbz	TABLE 6-4 ZONE AIR DIST. EFFECTIVENESS Ez	ZONE OUTDOOR AIR FLOW (CFM) Voz	ZONE PRMARY AIR FLOW (MIN. CFM) Vpz	PROVIDED MIN AIRFLOW (CFM)	EXHAUST REQUIRED (CFM)	PROVIDED EXHAUST AIRFLOW (CFM)	AIR CLASS
403A - JANITOR'S CLOSET		[EXH] JANITOR CLOSETS, TRASH ROOMS, RECYCLING	14	--	--	--		0.0	--	1.0	0.0	0.0	0	0.8	0	0	0	14	50	3
403 - RESTROOM		[EXH] TOILETS--PUBLIC	98	--	--	--	4	4.0	--	50/70	0.0	0.0	0	0.8	0	0	0	200/280	200	2
458 - RESTROOM		[EXH] TOILETS--PUBLIC	51	--	--	--	1	1.0	--	50/70	0.0	0.0	0	0.8	0	0	0	50/70	75	2
457 - RESTROOM		[EXH] TOILETS--PUBLIC	49	--	--	--	1	1.0	--	50/70	0.0	0.0	0	0.8	0	0	0	50/70	75	2
433 - STAFF BREAKROOM	TU 410	[EXH] KITCHENETTES	190	--	--	--		0.0	--	0.3	0.0	0.0	0	0.8	0	0	0	57	100	2
466 - GRAD SEMINAR ROOM	TU 401	LECTURE CLASSROOM	665	0.06	65	43.2		44.0	7.5	--	330.0	39.9	40	0.8	50	75	75	--	--	1
467 - STUDENT VIEWING ROOM	TU 402	CONFERENCE/MEETING	230	0.06	50	11.5	9	9.0	5.0	--	45.0	13.8	59	0.8	74	111	115	--	--	1
409 - GROUP ROOM	TU 403	CONFERENCE/MEETING	323	0.06	50	16.2		17.0	5.0	--	85.0	19.4	104	0.8	130	195	195	--	--	1
417 - CLINIC	TU 404	OFFICE SPACE	91	0.06	5	0.5	2	2.0	5.0	--	10.0	5.5	15	0.8	19	29	30	--	--	1
418 - CLINIC	TU 404	OFFICE SPACE	113	0.06	5	0.6	2	2.0	5.0	--	10.0	6.8	17	0.8	21	32	35	--	--	1
424 - AUDIOLOGY CLINIC	TU 405	CONFERENCE/MEETING	284	0.06	50	14.2	5	5.0	5.0	--	25.0	17.1	42	0.8	53	80	80	--	--	1
416 - CLINIC	TU 405	OFFICE SPACE	76	0.06	5	0.4	2	2.0	5.0	--	10.0	4.6	15	0.8	18	27	30	--	--	1
410 - CLINIC	TU 405	OFFICE SPACE	81	0.06	5	0.4	2	2.0	5.0	--	10.0	4.9	15	0.8	19	29	30	--	--	1
C412 - CORRIDOR	TU 405	CORRIDORS	382	0.06	--	--		0.0	--	--	0.0	22.9	23	0.8	29	44	45	--	--	1
245 - SUPPLY	TU 405	OCCUPIABLE STORAGE ROOMS FOR DRY MATERIALS	70	0.06	2	0.1		1.0	5.0	--	5.0	4.2	9	0.8	11	17	20	--	--	1
419 - CLINIC	TU 406	OFFICE SPACE	90	0.06	5	0.5	2	2.0	5.0	--	10.0	5.4	15	0.8	19	29	30	--	--	1
420 - CLINIC	TU 406	OFFICE SPACE	90	0.06	5	0.4	2	2.0	5.0	--	10.0	5.4	15	0.8	19	29	30	--	--	1
421 - CLINIC	TU 406	OFFICE SPACE	90	0.06	5	0.4	2	2.0	5.0	--	10.0	5.4	15	0.8	19	29	30	--	--	1
422 - CLINIC	TU 407	OFFICE SPACE	89	0.06	5	0.4	2	2.0	5.0	--	10.0	5.4	15	0.8	19	29	30	--	--	1
423 - CLINIC	TU 407	OFFICE SPACE	90	0.06	5	0.4	2	2.0	5.0	--	10.0	5.4	15	0.8	19	29	30	--	--	1
426 - ADMIN OFFICE	TU 407	OFFICE SPACE	85	0.06	5	0.4	1	1.0	5.0	--	5.0	5.1	10	0.8	13	20	20	--	--	1
C414 - CORRIDOR	TU 408	CORRIDORS	104	0.06	--	--		0.0	--	--	0.0	6.3	6	0.8	8	12	15	--	--	1
427/428 - RECEPTION AREA	TU 408	RECEPTION AREAS	780	0.06	30	23.4		24.0	5.0	--	120.0	46.8	167	0.8	208	312	315	--	--	1
C416 - CORRIDOR	TU 409	CORRIDORS	150	0.06	--	--		0.0	--	--	0.0	9.0	9	0.8	11	17	20	--	--	1
L400 - ELEVATOR LOBBY	TU 409	MAIN ENTRY LOBBIES	175	0.06	10	1.7		2.0	5.0	--	10.0	10.5	20	0.8	26	39	40	--	--	1
431 - ADJUNCT OFFICES	TU 409	OFFICE SPACE	195	0.06	5	1.0	5	5.0	5.0	--	25.0	11.7	37	0.8	46	69	70	--	--	1
C415 - PRINT ROOM	TU 409	[EXH] COPY, PRINTING ROOMS	116	--	--	--		0.0	--	0.5	0.0	0.0	0	0.8	0	0	0	58	60	2
431A - VIDEO ROOM	TU 409	OFFICE SPACE	35	0.06	5	0.2	1	1.0	5.0	--	5.0	2.1	7	0.8	9	14	15	--	--	1
433 - STAFF BREAKROOM	TU 410	CONFERENCE/MEETING	190	0.06	50	9.5		10.0	5.0	--	50.0	11.4	61	0.8	77	116	120	--	--	1
434 - OFFICE	TU 410	OFFICE SPACE	100	0.06	5	0.5	1	1.0	5.0	--	5.0	6.0	11	0.8	14	21	25	--	--	1
432 - RESEARCH LAB	TU 411	CONFERENCE/MEETING	189	0.06	50	9.4		10.0	5.0	--	50.0	11.3	61	0.8	77	116	120	--	--	1
430 - RESEARCH LAB	TU 411	CONFERENCE/MEETING	204	0.06	50	10.2		11.0	5.0	--	55.0	12.2	67	0.8	84	126	130	--	--	1
430A - TESTING ROOM	TU 411	OFFICE SPACE	87	0.06	5	0.4	2	2.0	5.0	--	10.0	5.2	15	0.8	19	29	30	--	--	1
430B - TESTING ROOM	TU 411	OFFICE SPACE	98	0.06	5	0.5	2	2.0	5.0	--	10.0	5.9	16	0.8	20	30	30	--	--	1
437 - OFFICE	TU 412	OFFICE SPACE	109	0.06	5	0.5	1	1.0	5.0	--	5.0	6.6	12	0.8	14	21	25	--	--	1
436 - OFFICE	TU 412	OFFICE SPACE	119	0.06	5	0.6	1	1.0	5.0	--	5.0	7.1	12	0.8	15	23	25	--	--	1
435 - OFFICE	TU 412	OFFICE SPACE	100	0.06	5	0.5	1	1.0	5.0	--	5.0	6.0	11	0.8	14	21	25	--	--	1
C417 - CORRIDOR	TU 413	CORRIDORS	220	0.06	--	--		0.0	--	--	0.0	13.2	13	0.8	17	26	30	--	--	1
442 - RESEARCH LAB	TU 413	CONFERENCE/MEETING	202	0.06	50	10.1		11.0	5.0	--	55.0	12.1	67	0.8	84	126	130	--	--	1
440 - RESEARCH LAB	TU 413	CONFERENCE/MEETING	201	0.06	50	10.0		11.0	5.0	--	55.0	12.1	67	0.8	84	126	130	--	--	1
438 - CONFERENCE	TU 414	CONFERENCE/MEETING	186	0.06	50	9.3		10.0	5.0	--	50.0	11.1	61	0.8	76	114	115	--	--	1
443 - OFFICE	TU 415	OFFICE SPACE	108	0.06	5	0.5	1	1.0	5.0	--	5.0	6.5	11	0.8	14	21	25	--	--	1
441 - OFFICE	TU 415	OFFICE SPACE	108	0.06	5	0.5	1	1.0	5.0	--	5.0	6.5	11	0.8	14	21	25	--	--	1
439 - OFFICE	TU 415	OFFICE SPACE	108	0.06	5	0.5	1	1.0	5.0	--	5.0	6.5	11	0.8	14	21	25	--	--	1
448 - OFFICE	TU 416	OFFICE SPACE	108	0.06	5	0.5	1	1.0	5.0	--	5.0	6.5	11	0.8	14	21	25	--	--	1
447 - OFFICE	TU 416	OFFICE SPACE	108	0.06	5	0.5	1	1.0	5.0	--	5.0	6.5	11	0.8	14	21	25	--	--	1
445 - OFFICE	TU 416	OFFICE SPACE	108	0.06	5	0.5	1	1.0	5.0	--	5.0	6.5	11	0.8	14	21	25	--	--	1
452 - OFFICE	TU 417	OFFICE SPACE	110	0.06	5	0.5	1	1.0	5.0	--	5.0	6.6	12	0.8	14	21	25	--	--	1
451 - OFFICE	TU 417	OFFICE SPACE	110	0.06	5	0.5	1	1.0	5.0	--	5.0	6.6	12	0.8	14	21	25	--	--	1
450 - OFFICE	TU 417	OFFICE SPACE	110	0.06	5	0.5	1	1.0	5.0	--	5.0	6.6	12	0.8	14	21	25	--	--	1
C419 - CORRIDOR	TU 418	CORRIDORS	221	0.06	--	--		0.0	--	--	0.0	13.2	13	0.8	17	26	30	--	--	1
446 - RESEARCH LAB	TU 418	CONFERENCE/MEETING	204	0.06	50	10.2		11.0	5.0	--	55.0	12.2	67	0.8	84	126	130	--	--	1
444 - RESEARCH LAB	TU 418	CONFERENCE/MEETING	203	0.06	50	10.1		11.0	5.0	--	55.0	12.2	67	0.8	84	126	130	--	--	1
C420 - CORRIDOR	TU 419	CORRIDORS	208	0.06	--	--		0.0	--	--	0.0	12.5	12	0.8	16	24	25	--	--	1
456 - RESEARCH LAB	TU 419	CONFERENCE/MEETING	222	0.06	50	11.1		12.0	5.0	--	60.0	13.3	73	0.8	92	138	140	--	--	1
455B - ZOOM ROOM	TU 419	OFFICE SPACE	33	0.06	5	0.2	1	1.0	5.0	--	5.0	2.0	7	0.8	9	14	15	--	--	1
455C - ZOOM ROOM	TU 419	OFFICE SPACE	32	0.06	5	0.2	1	1.0	5.0	--	5.0	1.9	7	0.8	9	14	15	--	--	1
461 - MEETING/STUDY	TU 420	OFFICE SPACE	95	0.06	5	0.5	4	4.0	5.0	--	20.0	5.7	26	0.8	32	48	50	--	--	1
454 - OFFICE	TU 420	OFFICE SPACE	109	0.06	5	0.5	1	1.0	5.0	--	5.0	6.5	12	0.8	14	21	25	--	--	1
453 - OFFICE	TU 420	OFFICE SPACE	110	0.06	5	0.6	1	1.0	5.0	--	5.0	6.6	12	0.8	15	23	25	--	--	1
452 - OFFICE	TU 420	OFFICE SPACE	110	0.06	5	0.5	1	1.0	5.0	--	5.0	6.6	12	0.8	14	21	25	--	--	1
C422 - CORRIDOR	TU 421	CORRIDORS	207	0.06	--	--		0.0	--	--	0.0	12.4	12	0.8	16	24	25	--	--	1
460 - STUDENT WORK/STUDY	TU 421	RECEPTION AREAS	1005	0.06	30	30.1		31.0	5.0	--	155.0	60.3	215	0.8	269	404	405	--	--	1
463 - SECURITY ROOM	TU 422	TELEPHONE/DATA ENTRY	197	0.06	60	11.8		12.0	5.0	--	60.0	11.8	72	0.8	90	135	135	--	--	1
463 - PREP SECURITY ROOM	TU 422	[EXH] COPY, PRINTING ROOMS	197	--	--	--		0.0	--	0.5	0.0	0.0	0	0.8	0	0	0	98	100	2
464 - TOY WORKROOM	TU 422	OCCUPIABLE STORAGE ROOMS FOR DRY MATERIALS	252	0.06	2	0.5		1.0	5.0	--	5.0	15.1	20	0.8	25	38	40	--	--	1
465 - GRAD SEMMINAR	TU 423	LECTURE CLASSROOM	614	0.06	65	39.9		40.0	7.5	--	300.0	36.8	37	0.8	46	69	70	--	--	1
C424 - CORRIDOR	TU 424	CORRIDORS	453	0.06	--	--		0.0	--	--	0.0	27.2	27	0.8	34	51	55	--	--	1
411 - VIEWING ROOM	TU 424	OFFICE SPACE	72	0.06	5	0.4	5	5.0	5.0	--	25.0	4.3	29	0.8	37	56	60	--	--	1
412 - VIEWING ROOM	TU 424	OFFICE SPACE	78	0.06	5	0.4	5	5.0	5.0	--	25.0	4.7	30	0.8	37	56	60	--	--	1
413 - VIEWING ROOM	TU 424	OFFICE SPACE	76	0.06	5	0.4	5	5.0	5.0	--	25.0	4.6	30	0.8	37	56	60	--	--	1
414 - VIEWING ROOM	TU 424	OFFICE SPACE	78	0.06	5	0.4	5	5.0	5.0	--	25.0	4.7	30	0.8	37	56	60	--	--	1
449 - DIRECTOR OFFICE	TU 425	OFFICE SPACE	185	0.06	5	0.9	1	1.0	5.0	--	5.0	11.1	16	0.8	20	30	30	--	--	1
			13,411				Total all zones Pz:	**365**			**1,985**	**722**								

Portland State UNIVERSITY

PSU CAPITAL PROJECTS & CONSTRUCTION

RMNC

RICHARD & MAURINE NEUBERGER CENTER

4TH FLOOR SPHR INTERIOR REMODEL

PSU CAMPUS | BLOCK: 087
1600 SW 4TH AVENUE
PORTLAND, OREGON 97201

GLUMAC
A TETRA TECH COMPANY
900 SW Fifth Ave., Suite 1600
Portland, OR 97204
www.glumac.com
T. 503.227.5280
Project Manager: P. Hallowell
Job. No.: 150-26US00253

REGISTERED PROFESSIONAL ENGINEER
100672PE
OREGON
NOVEMBER 12, 2024
PAUL HALLOWELL
EXPIRES: 06/30/27

ISSUED FOR BID & PERMIT

9/4/2026

Sheet Title :
CALCULATIONS

Revisions :

Date :

Drawn : KC

Checked : WD

Sheet # :
M003

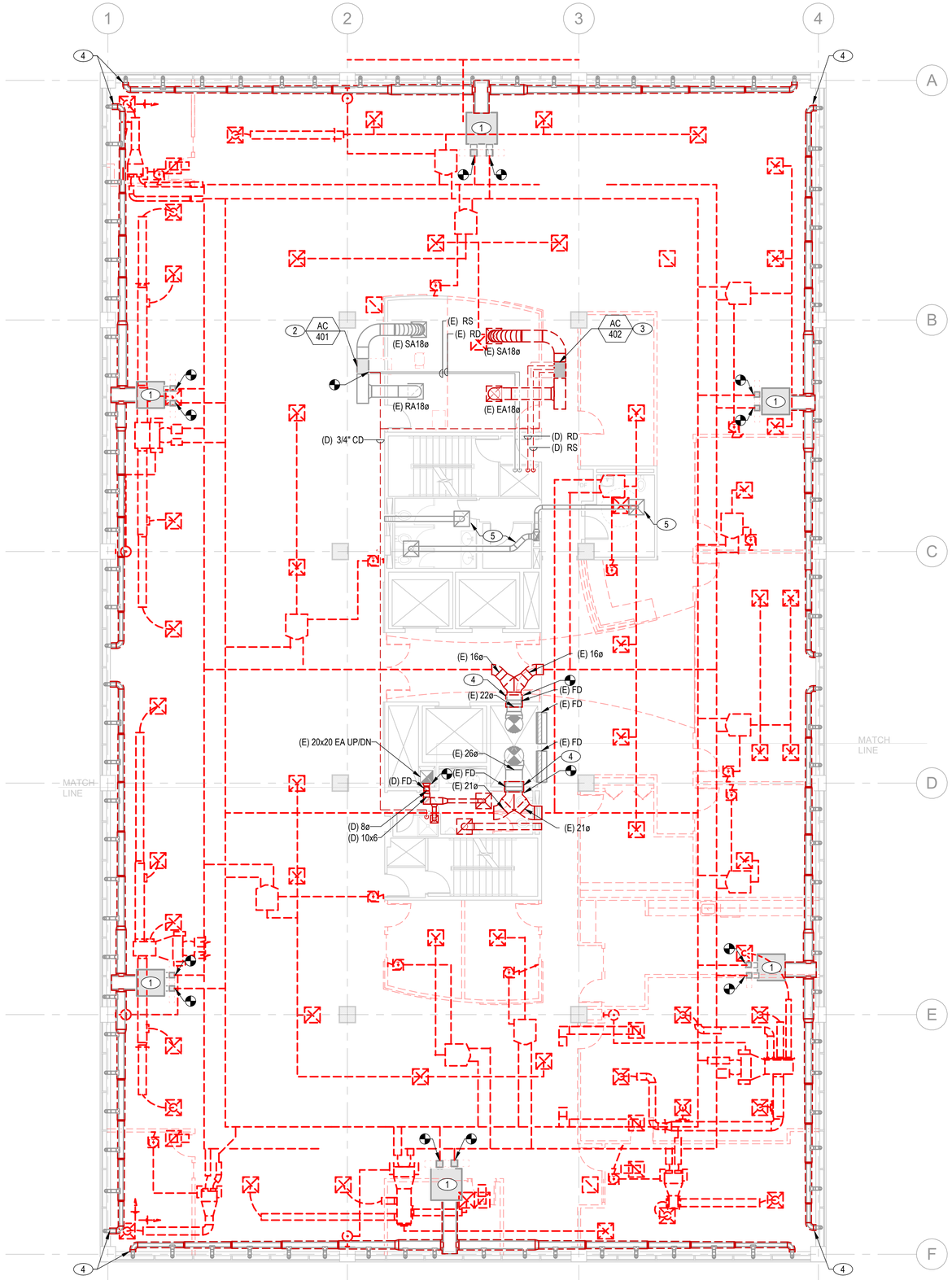

1 LEVEL 4 - OVERALL DEMO PLAN - HVAC

SCALE: 1/8" = 1'-0"

SHEET NOTES

A. ALL EXISTING CONDITIONS SHALL BE VERIFIED BY CONTRACTOR IN THE FIELD. REPRESENTATION ON DRAWINGS IS BASED ON THE BEST INFORMATION AVAILABLE AT THE TIME OF THEIR CREATION.
B. CONTRACTOR IS RESPONSIBLE FOR ALL COORDINATION INCLUDING TEMPORARY SERVICES DURING CONSTRUCTION.
C. PROVIDE PRE-TAB OF DUAL DUCT SYSTEM PRIOR TO START OF ANY DEMOLITION. INCLUDE THE FOLLOWING INFORMATION AT A MINIMUM: MIN AND MAX COLD AND HOT DECK SUPPLY AIRFLOWS FOR EACH TERMINAL UNIT, MIN AND MAX EXHAUST AIRFLOWS (IF VARIABLE). SUBMIT PRE-TAB RESULTS TO DESIGN TEAM FOR REVIEW.
D. DEMOLISH ALL DUAL DUCT DISTRIBUTION MAINS, EXISTING DUAL DUCT TERMINAL UNITS, AND EXISTING THERMOSTATS UNLESS OTHERWISE NOTED. CAP DUAL DUCT MAINS AT THE SHAFT PENETRATION.
E. EXISTING EXHAUST DUCTWORK TO REMAIN IN PLACE.
F. EXISTING UNDERFLOOR AIR DISTRIBUTION SERVING THE PERIMETER TO BE PRESERVED. PROTECT THE DIFFUSER OPENINGS DURING CONSTRUCTION.
G. FIELD VERIFY EXISTING DUCT STATIC PRESSURE SENSOR LOCATION THAT SERVES THE PENTHOUSE AHU. DO NOT DEMOLISH BUILDING STATIC PRESSURE SENSOR AND PRESERVE ALL ASSOCIATED CONTROL COMPONENTS. DESIGN INTENT IS TO REUSE EXISTING SENSOR WITHIN THE NEW DUCT DISTRIBUTION.

KEYED NOTES (#)

1 EXISTING DUAL DUCT TERMINAL UNIT TO REMAIN IN PLACE. DEMOLISH ALL DUCTWORK CONNECTIONS BETWEEN THE MAINS AND THE DUAL DUCT TERMINAL UNIT. EXISTING DOWNSTREAM DUCTWORK TO REMAIN. PRE-TAB READING OF MIN AND MAX AIRFLOWS SHALL BE PROVIDED PRIOR TO DEMOLISHING DUCTWORK.

2 EXISTING SPLIT SYSTEM, ASSOCIATED DUCTWORK, AND GRDS TO BE CLEANED, SERVICED, AND REUSED. CONDENSATE PUMP AND CONDENSATE PIPING TO BE DEMOLISHED.

3 DEMOLISH EXISTING SPLIT SYSTEM EQUIPMENT AND ALL ASSOCIATED APPURTENANCES, INCLUDING ALL REFRIGERANT PIPING FROM FAN COIL THRU SHAFT TO CONDENSING UNIT IN GARAGE.

4 DEMOLISH AND REPLACE DUCTWORK INSULATION. EXISTING SHEET METAL TO REMAIN.

5 EXISTING TO REMAIN. DO NOT DEMOLISH.

1/8" = 1'-0"

0 8' - 0" 16' - 0" 24' - 0" 32' - 0"

Portland State UNIVERSITY

PSU CAPITAL PROJECTS & CONSTRUCTION

RMNC

RICHARD & MAURINE NEUBERGER CENTER

4TH FLOOR SPHR INTERIOR REMODEL

PSU CAMPUS | BLOCK: 087
1600 SW 4TH AVENUE
PORTLAND, OREGON 97201

GLUMAC
A TETRA TECH COMPANY
900 SW Fifth Ave., Suite 1600
Portland, OR 97204
www.glumac.com
T. 503.227.5280
Project Manager: P. Hallowell
Job. No.: 150-26US00253

REGISTERED PROFESSIONAL ENGINEER
100672PE
OREGON
NOVEMBER 12, 2024
PAUL HALLOWELL
EXPIRES: 06/30/27

ISSUED FOR BID & PERMIT

9/4/2026

Sheet Title :
LEVEL 4 - OVERALL DEMO PLAN - HVAC

Revisions : | Date :

Drawn : KC | Checked : WD

Sheet # :
M140

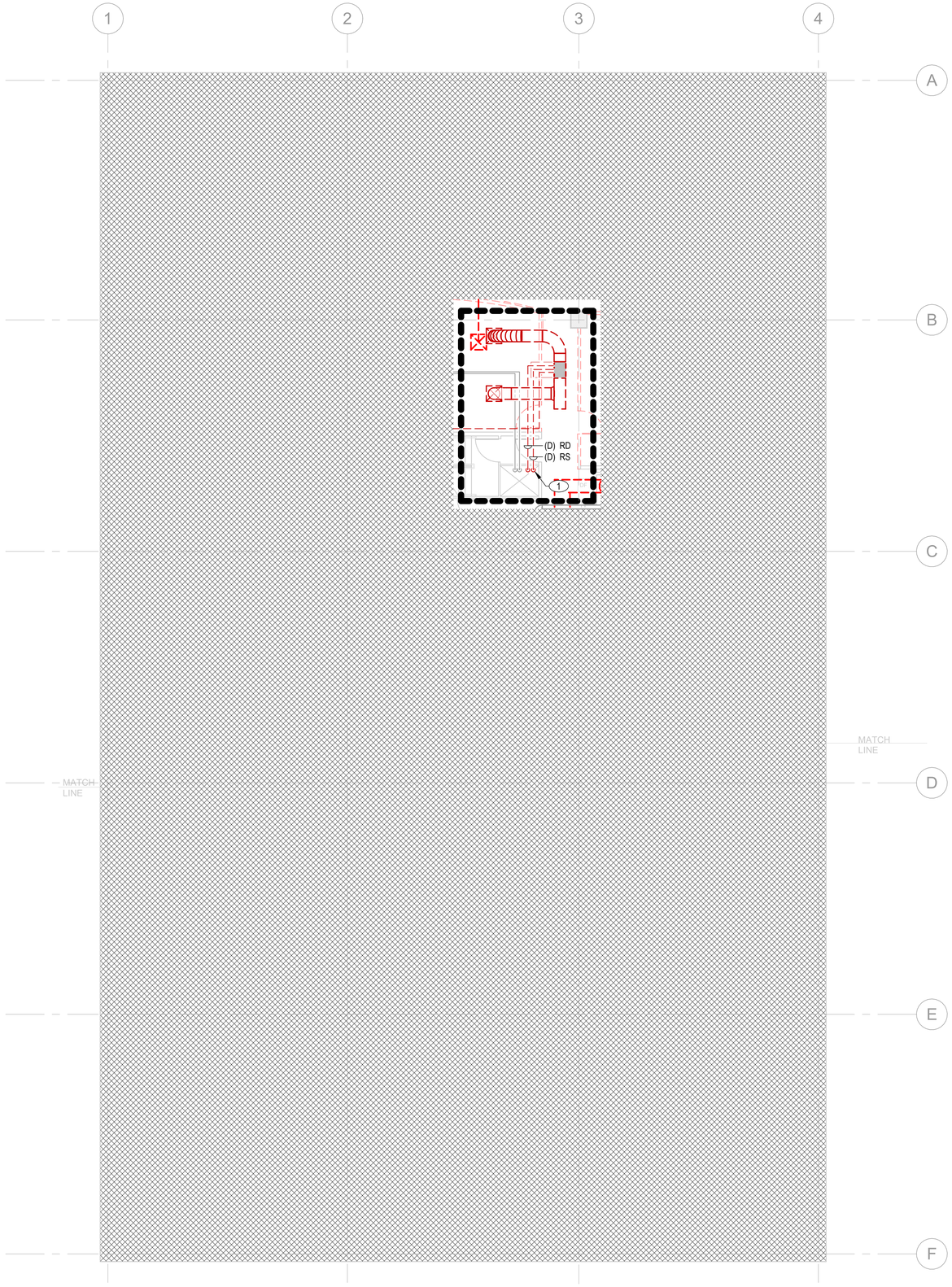

1 LEVEL 4 - OVERALL DEMO PLAN - HVAC ADD ALTERNATE
SCALE: 1/8" = 1'-0"

SHEET NOTES

A. ALL EXISTING CONDITIONS SHALL BE VERIFIED BY CONTRACTOR IN THE FIELD. REPRESENTATION ON DRAWINGS IS BASED ON THE BEST INFORMATION AVAILABLE AT THE TIME OF THEIR CREATION.

KEYED NOTES (#)

1 ADD ALTERNATE: ABANDON IN PLACE, DEMOLISH ALL REFRIGERANT PIPING UP UNTIL THE SHAFT. CAP PIPING AND LABEL REFRIGERANT PIPING "ABANDONED IN PLACE" WHERE IT ENTERS AND LEAVES THE SHAFT.

1/8" = 1'-0"
0 8' - 0" 16' - 0" 24' - 0" 32' - 0"

Portland State UNIVERSITY
PSU CAPITAL PROJECTS & CONSTRUCTION

RMNC
RICHARD & MAURINE NEUBERGER CENTER

4TH FLOOR SPHR INTERIOR REMODEL

PSU CAMPUS | BLOCK: 087
1600 SW 4TH AVENUE
PORTLAND, OREGON 97201

GLUMAC
A TETRA TECH COMPANY
900 SW Fifth Ave., Suite 1600
Portland, OR 97204
www.glumac.com
T. 503.227.5280
Project Manager: P. Hallowell
Job. No.: 150-26US00253

REGISTERED PROFESSIONAL ENGINEER
100672PE
OREGON
NOVEMBER 12, 2024
PAUL HALLOWELL
EXPIRES: 06/30/27

ISSUED FOR BID & PERMIT

9/4/2026

Sheet Title :
LEVEL 4 - DEMO PLAN - HVAC ADD ALTERNATE

Revisions : | Date :

Drawn : KC | Checked : WD

Sheet # :
M141

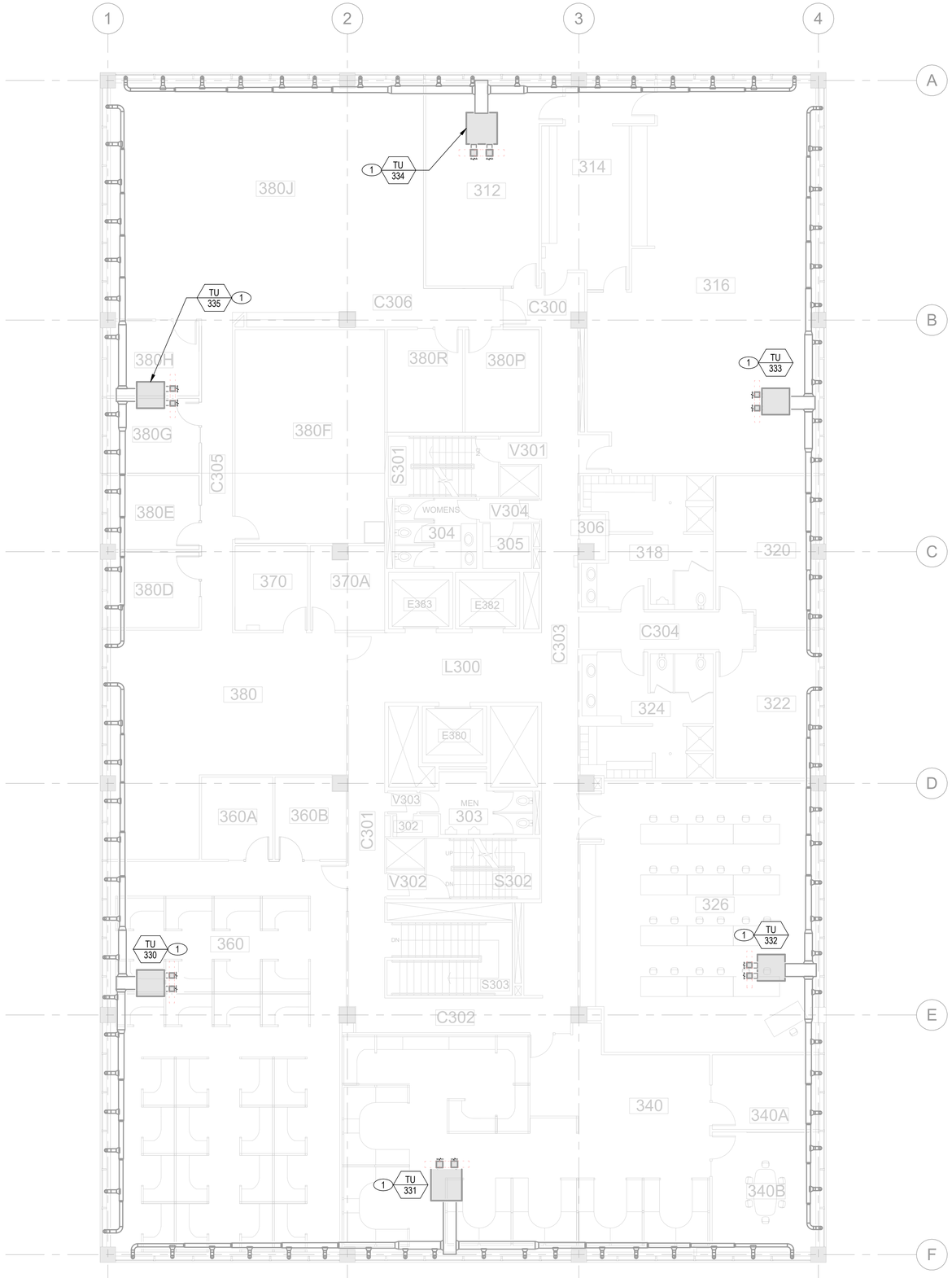

SHEET NOTES

A. ALL EXISTING CONDITIONS SHALL BE VERIFIED BY CONTRACTOR IN THE FIELD. REPRESENTATION ON DRAWINGS IS BASED ON THE BEST INFORMATION AVAILABLE AT THE TIME OF THEIR CREATION.
B. CONTRACTOR IS RESPONSIBLE FOR ALL COORDINATION INCLUDING TEMPORARY SERVICES DURING CONSTRUCTION.
C. PROVIDE PRE-TAB OF DUAL DUCT SYSTEM. INCLUDE THE FOLLOWING INFORMATION AT A MINIMUM: MIN AND MAX COLD AND HOT DECK SUPPLY AIRFLOWS FOR EACH TERMINAL. SUBMIT PRE-TAB RESULTS TO DESIGN TEAM FOR REVIEW.
D. EXISTING DUAL DUCT UNITS ON LEVEL 3 SERVING THE LEVEL 4 PERIMETER SHOWN FOR REFERENCE. REVISE ASSOCIATED CONTROLS GRAPHICS TO ALIGN WITH NEW PROGRAMMING ON LEVEL 4.

KEYED NOTES (#)

1 EXISTING DUAL DUCT TERMINAL UNIT TO REMAIN IN PLACE. PRE-TAB READING OF MIN AND MAX AIRFLOWS SHALL BE PROVIDED.

1 **LEVEL 3 - OVERALL FLOOR PLAN - HVAC**
SCALE: 1/8" = 1'-0"

1/8" = 1'-0"
0 8' - 0" 16' - 0" 24' - 0" 32' - 0"

Portland State UNIVERSITY
PSU CAPITAL PROJECTS & CONSTRUCTION

RMNC
RICHARD & MAURINE NEUBERGER CENTER

4TH FLOOR SPHR INTERIOR REMODEL

PSU CAMPUS | BLOCK: 087
1600 SW 4TH AVENUE
PORTLAND, OREGON 97201

GLUMAC
A TETRA TECH COMPANY
900 SW Fifth Ave., Suite 1600
Portland, OR 97204
www.glumac.com
T. 503.227.5280
Project Manager: P. Hallowell
Job. No.: 150-26US00253

REGISTERED PROFESSIONAL ENGINEER
100672PE
OREGON
NOVEMBER 12, 2024
PAUL HALLOWELL
EXPIRES: 06/30/27

ISSUED FOR BID & PERMIT

9/4/2026

Sheet Title :
LEVEL 3 - OVERALL FLOOR PLAN - HVAC

Revisions : | Date :

Drawn : Author | Checked : Checker

Sheet # :
M230

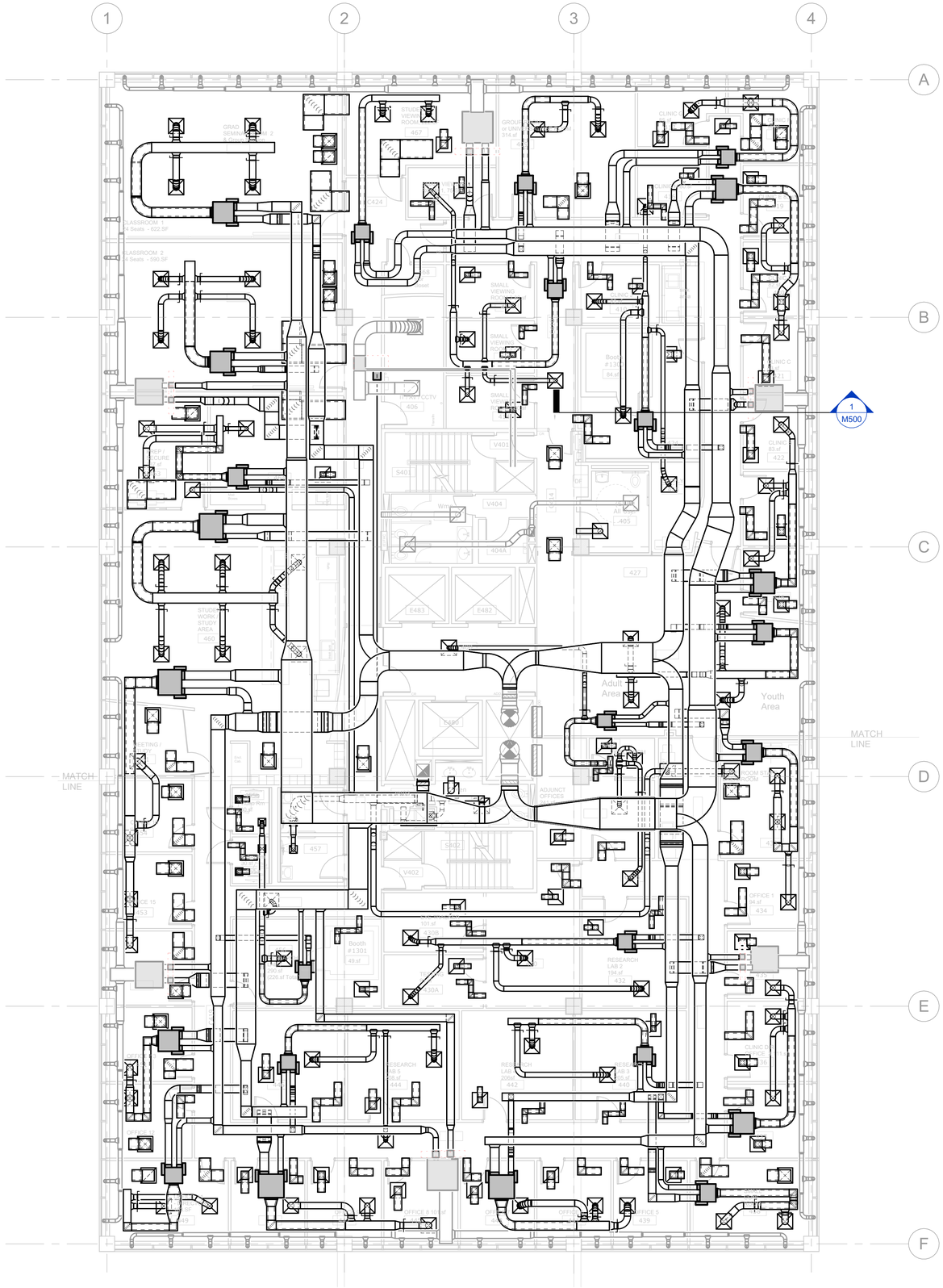

SHEET NOTES

A. OVERALL PLAN SHOWN FOR REFERENCE, REFER TO PARTIAL PANS FOR ADDITIONAL INFORMATION.

1 **LEVEL 4 - OVERALL FLOOR PLAN - HVAC**
SCALE: 1/8" = 1'-0"

1/8" = 1'-0"
0 8' - 0" 16' - 0" 24' - 0" 32' - 0"

Portland State UNIVERSITY
PSU CAPITAL PROJECTS & CONSTRUCTION

RMNC
RICHARD & MAURINE NEUBERGER CENTER

4TH FLOOR SPHR INTERIOR REMODEL

PSU CAMPUS | BLOCK: 087
1600 SW 4TH AVENUE
PORTLAND, OREGON 97201

GLUMAC
A TETRA TECH COMPANY
900 SW Fifth Ave., Suite 1600
Portland, OR 97204
www.glumac.com
T. 503.227.5280
Project Manager: P. Hallowell
Job. No.: 150-26US00253

REGISTERED PROFESSIONAL ENGINEER
100672PE
OREGON
NOVEMBER 12, 2024
PAUL HALLOWELL
EXPIRES: 06/30/27

ISSUED FOR BID & PERMIT

9/4/2026

Sheet Title :
LEVEL 4 - OVERALL FLOOR PLAN - HVAC

Revisions : | Date :

Drawn : KC | Checked : WD

Sheet # :
M240

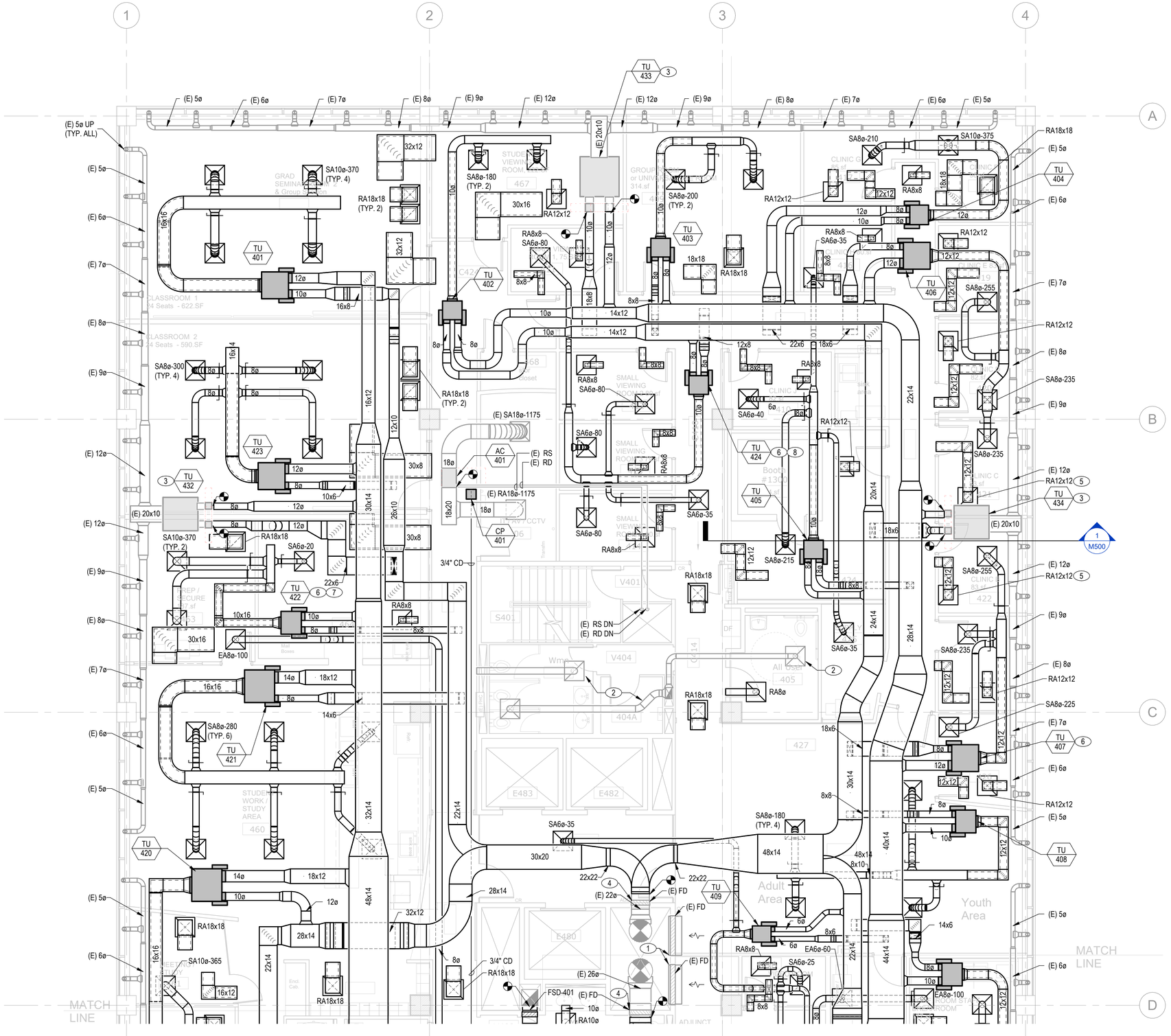

SHEET NOTES

A. DIMENSIONS AND SHAPE OF THE DUCT MAY BE ALTERED, AS LONG AS THE SAME AIR VELOCITY AND FLOW RATE ARE MAINTAINED, TO AVOID INTERFERENCES AND MAINTAIN ADEQUATE CLEARANCES.
B. ALL DUCTWORK DIMENSIONS, AS SHOWN ON THE DRAWINGS, ARE INTERNAL CLEAR DIMENSIONS AND DUCT SIZE SHALL BE INCREASED TO COMPENSATE FOR DUCT LINING THICKNESS.
C. INSTALL VOLUME DAMPERS WHERE SHOWN AND AS REQUIRED FOR PROPER BALANCING OF EACH DIFFUSER/GRILLE/REGISTER, INCLUDING DEVICES WITH OPPOSED BLADE DAMPERS. VOLUME DAMPERS SHALL BE MOUNTED IMMEDIATELY DOWNSTREAM OF BRANCH CONNECTIONS. PROVIDE EXTENDED REGULATORS, WITH CONCEALED COVER PLATES, TO OPERATE DAMPERS LOCATED ABOVE INACCESSIBLE CEILINGS.
D. REFER TO ARCHITECTURAL FLOOR PLANS, INTERIOR ELEVATIONS AND DETAIL DRAWINGS PRIOR TO ROUGH-IN FOR EXACT LOCATION OF AIR DEVICES. COORDINATE WITH CEILING GRID, LIGHTS, SPRINKLER HEADS, SEISMIC BRACING, TELEPHONE EQUIPMENT, AREA DETECTORS, ETC.
E. CEILING DIFFUSER SIZES SHOWN INDICATE NECK SIZES UNLESS OTHERWISE NOTED. PROVIDE FRAMES AS REQUIRED TO MATCH MOUNTING SURFACE.
F. USE OF FLEX DUCTWORK SHALL BE LIMITED TO 5' OF DISTRIBUTION AND 1 (ONE) ELBOW.
G. PROVIDE 2" ACOUSTICAL LINER 10' DOWNSTREAM OF ALL DUAL DUCT TERMINAL UNITS PRIOR TO FIRST TAP UNLESS OTHERWISE NOTED.
H. MAINTAIN CODE REQUIRED ELECTRICAL CLEARANCES TO ALL EQUIPMENT.
I. ENSURE ACCESS TO ALL EQUIPMENT CONTROLS. PROVIDE ACCESS PANEL THROUGH WALLS AS REQUIRED. REFER TO ARCHITECTURAL FOR ADDITIONAL INFORMATION.
J. A PLENUM RETURN STRATEGY WILL BE UTILIZED TO BRING AIR BACK TO THE CENTRAL AHU. ALL TRANSFER BOOTS WILL BE LINED WITH 2" ACOUSTICAL LINER. Z-FITTINGS OR L-FITTINGS WITH 2" ACOUSTICAL LINER WILL BE USED WHERE INDICATED TO CONNECT ADJACENT PLENUM SPACES WHERE THERE ARE FULL HEIGHT WALLS. SEE DETAILS.
K. CONDENSATE SHALL BE 3/4" U.O.N., SLOPE AT 2 %.
L. PIPE INSULATION SHALL BE CONTINUOUS. DO NOT CUT INSULATION FOR SUPPORTS OR HANGERS.
M. DUCTWORK DIMENSIONS SHALL MATCH EQUIPMENT OR AIR TERMINAL OPENINGS UNLESS OTHERWISE NOTED.

KEYED NOTES (#)

1 EXISTING 48x18 RA PLENUM OPENING. (TYP 2)

2 EXISTING TO REMAIN.

3 PROVIDE NEW DUCT INSULATION FOR ALL DOWNSTREAM LOW PRESSURE DUCTWORK FOR EXISTING TERMINAL UNIT.

4 PROVIDE NEW DUCT INSULATION FOR REUSED EXISTING HOT DECK AND COLD DECK MAIN DUCTWORK.

5 DIRECTLY CONNECT PLENUM RETURN BOOT TO CORRIDOR PLENUM SPACE THROUGH FULL HEIGHT WALL. PROVIDE ONE MITERED ELBOW AND MINIMUM 2X DUCT DIAMETER LENGTH BETWEEN ELBOW AND ONE OF THE DUCT OPENINGS. LOCATE PENETRATION THROUGH FULL HEIGHT WALL ABOVE DOORS WHERE POSSIBLE.

6 PROVIDE HARD DUCT CONNECTIONS AT DIFFUSERS TO ADDRESS LOW FREQUENCY NOISE.

7 PROVIDE 15 FEET OF 2" LINER BEFORE THE FIRST BRANCH TAP.

8 PROVIDE 14 FEET OF 2" LINER BEFORE THE FIRST BRANCH TAP.

1 LEVEL 4 - NORTH FLOOR PLAN - HVAC

SCALE: 3/16" = 1'-0"

3/16" = 1'-0"

0 5' - 4" 10' - 8" 16' - 0" 21' - 4"

Portland State UNIVERSITY

PSU CAPITAL PROJECTS & CONSTRUCTION

RMNC

RICHARD & MAURINE NEUBERGER CENTER

4TH FLOOR SPHR INTERIOR REMODEL

PSU CAMPUS | BLOCK: 087
1600 SW 4TH AVENUE
PORTLAND, OREGON 97201

GLUMAC
A TETRA TECH COMPANY
900 SW Fifth Ave., Suite 1600
Portland, OR 97204
www.glumac.com
T. 503.227.5280
Project Manager: P. Hallowell
Job. No.: 150-26US00253

REGISTERED PROFESSIONAL ENGINEER
100672PE
OREGON
NOVEMBER 12, 2024
PAUL HALLOWELL
EXPIRES: 06/30/27

ISSUED FOR BID & PERMIT

9/4/2026

Sheet Title :

LEVEL 4 - NORTH FLOOR PLAN - HVAC

Revisions : | Date :

Drawn : KC | Checked : WD

Sheet # :

M241

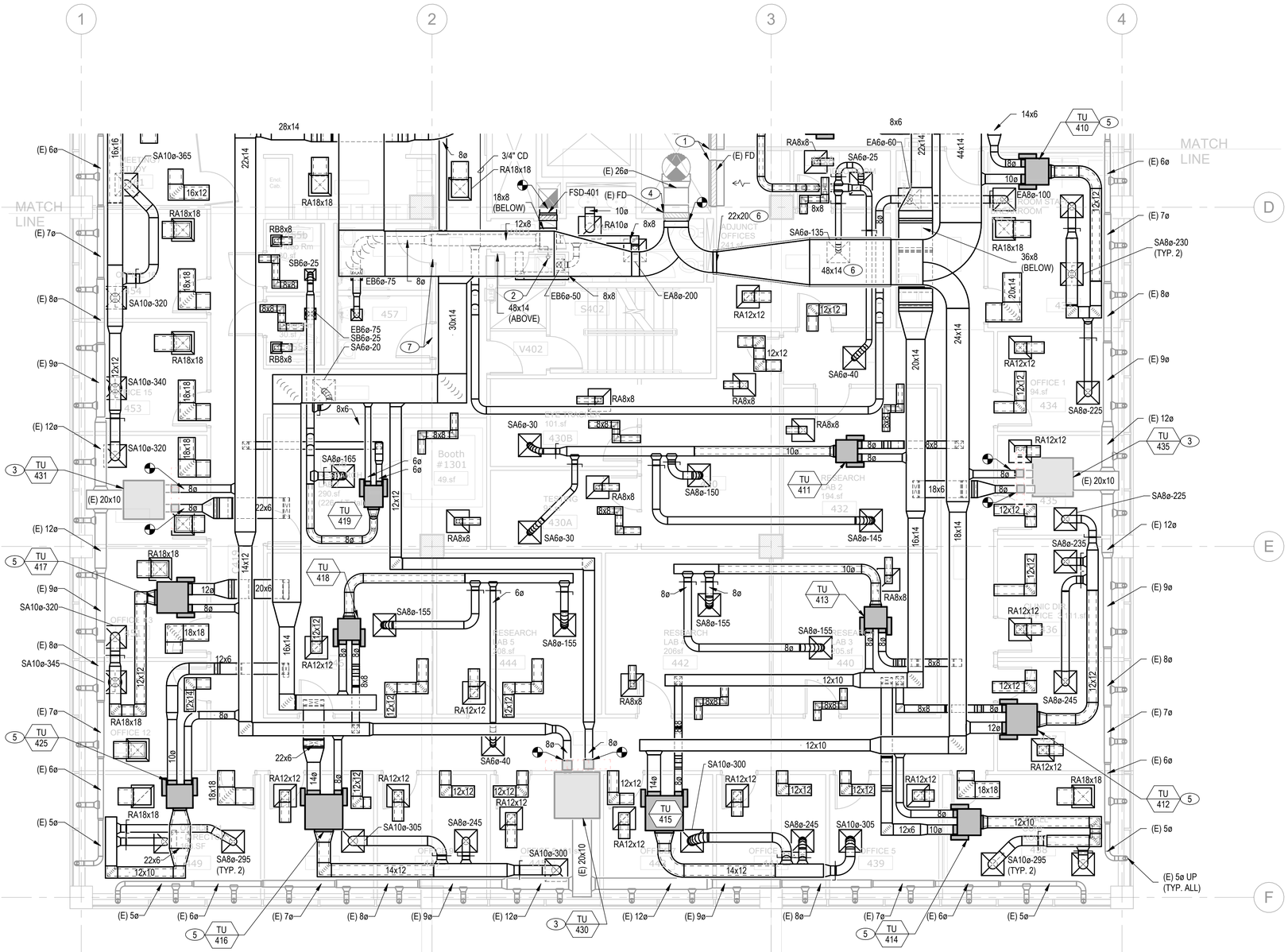

1 LEVEL 4 - SOUTH FLOOR PLAN - HVAC

SCALE: 3/16" = 1'-0"

3/16" = 1'-0"

0 5' - 4" 10' - 8" 16' - 0" 21' - 4"

SHEET NOTES

A. DIMENSIONS AND SHAPE OF THE DUCT MAY BE ALTERED, AS LONG AS THE SAME AIR VELOCITY AND FLOW RATE ARE MAINTAINED, TO AVOID INTERFERENCES AND MAINTAIN ADEQUATE CLEARANCES.
B. ALL DUCTWORK DIMENSIONS, AS SHOWN ON THE DRAWINGS, ARE INTERNAL CLEAR DIMENSIONS AND DUCT SIZE SHALL BE INCREASED TO COMPENSATE FOR DUCT LINING THICKNESS.
C. INSTALL VOLUME DAMPERS WHERE SHOWN AND AS REQUIRED FOR PROPER BALANCING OF EACH DIFFUSER/GRILLE/REGISTER, INCLUDING DEVICES WITH OPPOSED BLADE DAMPERS. VOLUME DAMPERS SHALL BE MOUNTED IMMEDIATELY DOWNSTREAM OF BRANCH CONNECTIONS. PROVIDE EXTENDED REGULATORS, WITH CONCEALED COVER PLATES, TO OPERATE DAMPERS LOCATED ABOVE INACCESSIBLE CEILINGS.
D. REFER TO ARCHITECTURAL FLOOR PLANS, INTERIOR ELEVATIONS AND DETAIL DRAWINGS PRIOR TO ROUGH-IN FOR EXACT LOCATION OF AIR DEVICES. COORDINATE WITH CEILING GRID, LIGHTS, SPRINKLER HEADS, SEISMIC BRACING, TELEPHONE EQUIPMENT, AREA DETECTORS, ETC.
E. CEILING DIFFUSER SIZES SHOWN INDICATE NECK SIZES UNLESS OTHERWISE NOTED. PROVIDE FRAMES AS REQUIRED TO MATCH MOUNTING SURFACE.
F. USE OF FLEX DUCTWORK SHALL BE LIMITED TO 5' OF DISTRIBUTION AND 1 (ONE) ELBOW.
G. PROVIDE 2" ACOUSTICAL LINER 10' DOWNSTREAM OF ALL DUAL DUCT TERMINAL UNITS PRIOR TO FIRST TAP UNLESS OTHERWISE NOTED.
H. MAINTAIN CODE REQUIRED ELECTRICAL CLEARANCES TO ALL EQUIPMENT.
I. ENSURE ACCESS TO ALL EQUIPMENT CONTROLS. PROVIDE ACCESS PANEL THROUGH WALLS AS REQUIRED. REFER TO ARCHITECTURAL FOR ADDITIONAL INFORMATION.
J. A PLENUM RETURN STRATEGY WILL BE UTILIZED TO BRING AIR BACK TO THE CENTRAL AHU. ALL TRANSFER BOOTS WILL BE LINED WITH 2" ACOUSTICAL LINER. Z-FITTINGS OR L-FITTINGS WITH 2" ACOUSTICAL LINER WILL BE USED WHERE INDICATED TO CONNECT ADJACENT PLENUM SPACES WHERE THERE ARE FULL HEIGHT WALLS. SEE DETAILS.
K. CONDENSATE SHALL BE 3/4" U.O.N., SLOPE AT 2 %.
L. PIPE INSULATION SHALL BE CONTINUOUS. DO NOT CUT INSULATION FOR SUPPORTS OR HANGERS.
M. DUCTWORK DIMENSIONS SHALL MATCH EQUIPMENT OR AIR TERMINAL OPENINGS UNLESS OTHERWISE NOTED.

KEYED NOTES (#)

1 EXISTING 48x18 RA PLENUM OPENING. (TYP 2)

2 TERMINATE CONDENSATE AT MOP SINK.

3 PROVIDE NEW DUCT INSULATION FOR ALL DOWNSTREAM LOW PRESSURE DUCTWORK FOR EXISTING TERMINAL UNIT.

4 PROVIDE NEW DUCT INSULATION FOR REUSED EXISTING HOT DECK AND COLD DECK MAIN DUCTWORK.

5 PROVIDE HARD DUCT CONNECTIONS AT DIFFUSERS TO ADDRESS LOW FREQUENCY NOISE.

6 PROVIDE MASS LOADED VINYL LAGGING FOR PORTION OF DUCTWORK ABOVE ADJUNCT OFFICE AS INDICATED. WRAP LAGGING AROUND DUCT INSULATION.

7 PROVIDE 3/4" DOOR UNDERCUT.

Portland State UNIVERSITY

PSU CAPITAL PROJECTS & CONSTRUCTION

RMNC

RICHARD & MAURINE NEUBERGER CENTER

4TH FLOOR SPHR INTERIOR REMODEL

PSU CAMPUS | BLOCK: 087
1600 SW 4TH AVENUE
PORTLAND, OREGON 97201

GLUMAC
A TETRA TECH COMPANY
900 SW Fifth Ave., Suite 1600
Portland, OR 97204
www.glumac.com
T. 503.227.5280
Project Manager: P. Hallowell
Job. No.: 150-26US00253

REGISTERED PROFESSIONAL ENGINEER
100672PE
OREGON
NOVEMBER 12, 2025
PAUL HALLOWELL
EXPIRES: 06/30/27

ISSUED FOR BID & PERMIT

9/4/2026

Sheet Title :
LEVEL 4 - SOUTH FLOOR PLAN - HVAC

Revisions : | Date :

Drawn : KC | Checked : WD

Sheet # :

M242

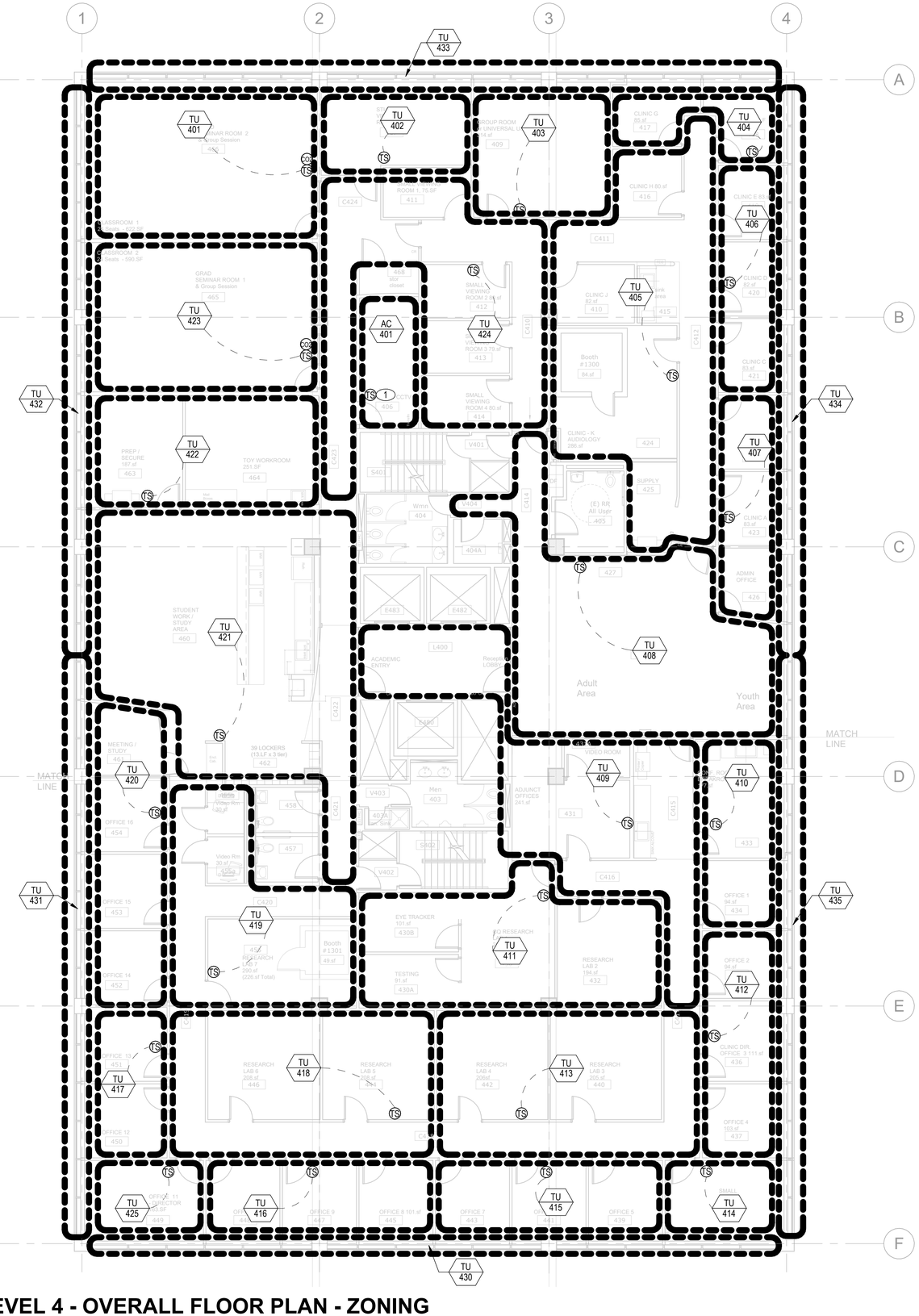

SHEET NOTES

A. SENSOR LOCATIONS ARE DIAGRAMMATIC. CONTROLS CONTRACTOR SHALL SUBMIT FINAL PROPOSED LOCATIONS OF ALL SENSOR FOR ARCHITECTURAL AND ENGINEERING REVIEW.
B. BAS CONTRACTOR SHALL PROVIDE CO2 AND TEMPERATURE SENSORS. MOUNT ALL SENSORS AT 48 INCHES AFF. - COORDINATE WITH ARCH ELEVATIONS.
C. DCV CONTROL WILL BE PROVIDED IN ZONES WITH CO2 SENSORS.
D. (TS) TEMPERATURE SENSOR - BRUSHED PLATE TEMPERATURE SENSOR, NON-ADJUSTABLE. SETPOINT CONTROL VIA BAS.
E. COORDINATE ALL CONTROLS AND SEQUENCES OF OPERATION WITH THE EXISTING BUILDING AUTOMATION SYSTEM (BAS). PROVIDE ALL DEVICES, CONTROLLERS, SENSORS, CONDUIT, WIRING AND LABOR TO PROVIDE A COMPLETE AND OPERATIONAL SYSTEM TO MEET THE OWNER'S PROJECT REQUIREMENTS.
F. INTEGRATE NEW CONTROLS SYSTEM INTO EXISTING BAS FRONT END. EXISTING CONTROLS COMMUNICATION PROTOCOL IS LON.
   1. FOR NEW TERMINAL UNITS, PROVIDE CONTROLLERS WITH BACNET COMMUNICATION PROTOCOL FOR INTEGRATION WITH EXISTING BAS.
   2. FOR EXISTING TERMINAL UNITS THAT WILL BE REUSED, CONTROLS GRAPHICS SHALL BE UPDATED TO REFLECT THE REVISED ZONING.

KEYED NOTES (#)

1 PROVIDE NEW TEMPERATURE SENSOR FOR MONITORING AND HIGH TEMPERATURE ALARM ONLY.

1 **LEVEL 4 - OVERALL FLOOR PLAN - ZONING**
SCALE: 1/8" = 1'-0"

1/8" = 1'-0"
0 8' - 0" 16' - 0" 24' - 0" 32' - 0"

Portland State UNIVERSITY
PSU CAPITAL PROJECTS & CONSTRUCTION

RMNC
RICHARD & MAURINE NEUBERGER CENTER

4TH FLOOR SPHR INTERIOR REMODEL

PSU CAMPUS | BLOCK: 087
1600 SW 4TH AVENUE
PORTLAND, OREGON 97201

GLUMAC
A TETRA TECH COMPANY
900 SW Fifth Ave., Suite 1600
Portland, OR 97204
www.glumac.com
T. 503.227.5280
Project Manager: P. Hallowell
Job. No.: 150-26US00253

REGISTERED PROFESSIONAL ENGINEER
100672PE
OREGON
NOVEMBER 12, 2024
PAUL HALLOWELL
EXPIRES: 06/30/27

ISSUED FOR BID & PERMIT

9/4/2026

Sheet Title :
LEVEL 4 - OVERALL FLOOR PLAN - ZONING

Revisions :	Date :

Drawn : KC Checked : WD

Sheet # :
M340

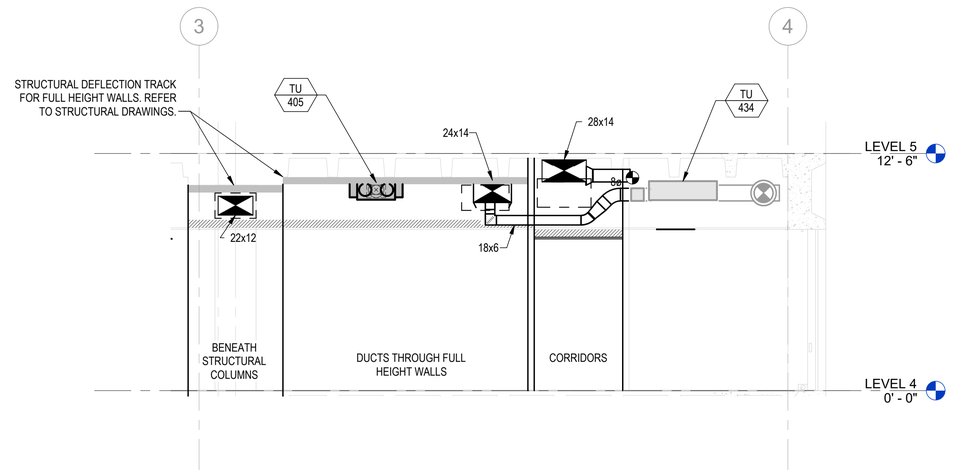

1 MECHANICAL SECTION VIEW - CORRIDOR

SCALE: 1/4" = 1'-0"

Portland State UNIVERSITY

PSU CAPITAL PROJECTS & CONSTRUCTION

RMNC

RICHARD & MAURINE NEUBERGER CENTER

4TH FLOOR SPHR INTERIOR REMODEL

PSU CAMPUS | BLOCK: 087
1600 SW 4TH AVENUE
PORTLAND, OREGON 97201

GLUMAC
A TETRA TECH COMPANY
900 SW Fifth Ave., Suite 1600
Portland, OR 97204
www.glumac.com
T. 503.227.5280
Project Manager: P. Hallowell
Job. No.: 150-26US00253

REGISTERED PROFESSIONAL ENGINEER
100672PE
OREGON
NOVEMBER 12, 2024
PAUL HALLOWELL
EXPIRES: 06/30/27

ISSUED FOR BID & PERMIT

9/4/2026

Sheet Title :
MECHANICAL SYSTEM SECTION VIEWS

Revisions :

Date :

Drawn : KC

Checked : WD

Sheet # :

M500

MECHANICAL - CONTROLS NOTES

1. CONTROLS INSTALLING CONTRACTOR SHALL FURNISH AND INSTALL EXTENSION OF EXISTING BUILDING AUTOMATION SYSTEM AS SPECIFIED IN SECTION 23 09 00. CONTRACTOR SHALL MEET ALL OWNER'S STANDARDS & REQUIREMENTS.
2. THE TERMS "BUILDING AUTOMATION SYSTEM" (BAS), "BUILDING MANAGEMENT SYSTEM" (BMS), AND "ENERGY MANAGEMENT CONTROL SYSTEM" (EMCS) SHALL BE CONSIDERED SYNONYMOUS.
3. CONTRACTOR SHALL COORDINATE AMONG TRADES AND WITH FINAL CONTROLS SHOP DRAWINGS TO PROVIDE DATA DROPS FOR ALL BAS CONTROLLERS AS NEEDED. ALL FINAL IT NETWORK TERMINATIONS SHALL BE COORDINATED WITH THE OWNER.
4. CONTRACTOR SHALL COORDINATE WITH ELECTRICAL TRADE TO PROVIDE 120V POWER FOR THE BUILDING CONTROLLER(S) WHERE NECESSARY.
5. ALL ROOM INFORMATION ON THE GRAPHICAL FRONT-END SHALL MATCH FINAL ROOM NAME AND NUMBER DESIGNATIONS. COORDINATE WITH OWNER AND ARCHITECT.
6. ALL SCHEDULES, SET POINTS, LIMITS, AND CONTROLS SHALL BE ADJUSTABLE BY THE OWNER AT THE FRONT END.
7. CONTROLS INSTALLING CONTRACTOR SHALL PROVIDE FRONT END SCHEDULE SUMMARY PAGES AND EQUIPMENT SUMMARY PAGES LISTING ALL SIMILAR EQUIPMENT SEPARATED PER AREA OR BUILDING AS APPLICABLE. SUMMARY PAGES SHALL LIST ALL COMMON SETPOINTS AND MEASURED POINTS.
8. CONTROLS INSTALLING CONTRACTOR SHALL PROVIDE VIRTUAL SEQUENCE PAGES AT FRONT END BASED ON FINAL AS-BUILTS, INCLUDING ALL MODIFICATIONS MADE IN THE FIELD.
9. CONTROLS INSTALLING CONTRACTOR TO INCLUDE PDF FILES OF A COMPLETE PROJECT POINTS LIST, SYSTEM DIAGRAM AND SEQUENCE OF OPERATIONS FOR ALL EQUIPMENT EXPORTED FROM THE COMPLETED CONTROLS SYSTEM AS PART OF THE AS-BUILT DOCUMENTATION RECORDS.
10. OPTIMUM START: THE BAS SHALL MONITOR THE SCHEDULED OCCUPIED TIME, OCCUPIED SETPOINTS, OUTDOOR AIR TEMPERATURE, AND SPACE TEMPERATURE TO CALCULATE AN OPTIMUM START TIME FOR THE HVAC SYSTEMS. THIS CALCULATION SHALL LEARN OVER TIME AND PREDICT OPTIMUM START TIME RELATIVE TO OUTDOOR AIR TEMPERATURE. WHEN THE OPTIMUM START MODE IS ACTIVATED THE HVAC SYSTEM SHALL MAINTAIN THE SPACE TEMPERATURE TO THE OCCUPIED HEATING OR COOLING SETPOINT. THE HVAC SYSTEM'S RESPECTIVE MIXED AIR OR DEDICATED OUTSIDE AIR INTAKES SHALL BE CLOSED OR DISENGAGED; WHERE A SPACE CONDITIONING SYSTEM IS 100% OUTSIDE AIR BY NATURE, IT SHALL UTILIZE ITS NORMAL OUTSIDE AIR INTAKE. UNDER NO CIRCUMSTANCES SHALL THE OPTIMUM START SEQUENCE OVERRIDE AIRFLOW SETPOINTS AT AN HVAC SYSTEM WHERE THAT SYSTEM IS RESETTING/CONTROLLING AIRFLOW TO MAINTAIN SPACE OR BUILDING PRESSURIZATION. OPTIMUM START SHALL FOLLOW ALL RECOMMENDATIONS IN ASHRAE GUIDELINE 36 AND REQUIREMENTS IN THE APPLICABLE ENERGY CODE. OPTIMUM START FOR EACH SYSTEM SHALL BE GRAPHICALLY DISPLAYED AT THE SYSTEM LEVEL WITH TOGGLE BUTTON FOR USER OVERRIDE OFF PER SYSTEM.
11. OPTIMUM STOP: THE BAS SHALL MONITOR THE SCHEDULED UNOCCUPIED TIME, OCCUPIED SETPOINTS, OUTDOOR AIR TEMPERATURE, AND SPACE TEMPERATURE TO CALCULATE AN OPTIMUM STOP TIME FOR THE HVAC SYSTEMS. THIS CALCULATION SHALL LEARN OVER TIME AND PREDICT OPTIMUM STOP TIME RELATIVE TO OUTDOOR AIR TEMPERATURE. WHEN THE OPTIMUM STOP MODE IS ACTIVED THE HVAC SYSTEM SHALL MAINTAIN THE SPACE TEMPERATURE TO THE UNOCCUPIED HEATING OR COOLING SETPOINT. THE HVAC SYSTEM'S RESPECTIVE OUTSIDE AIR SEQUENCE SHALL BE MAINTAINED; WHERE CO2-BASED DEMAND-CONTROLLED VENTILATION IS IMPLEMENTED FOR AN HVAC SYSTEM, THE OUTSIDE AIR SETPOINT SHALL BE RESET TO ITS MINIMUM ALLOWED FOR THE DURATION OF THE OPTIMUM STOP SEQUENCE. UNDER NO CIRCUMSTANCES SHALL THE OPTIMUM STOP SEQUENCE OVERRIDE AN OUTSIDE AIRFLOW SETPOINT AT AN HVAC SYSTEM WHERE THAT SYSTEM IS RESETTING/CONTROLLING OUTSIDE AIRFLOW TO MAINTAIN SPACE OR BUILDING PRESSURIZATION. OPTIMUM STOP SHALL FOLLOW ALL RECOMMENDATIONS IN ASHRAE GUIDELINE 36 AND REQUIREMENTS IN THE APPLICABLE ENERGY CODE. OPTIMUM STOP FOR EACH SYSTEM SHALL BE GRAPHICALLY DISPLAYED AT THE SYSTEM LEVEL WITH TOGGLE BUTTON FOR USER OVERRIDE OFF PER SYSTEM.
12. PROVIDE TIME DELAYS FOR ALL EQUIPMENT STAGING AS NEEDED TO PREVENT COINCIDENT IN-RUSH CURRENT SPIKES IN ORDER TO MINIMIZE UTILITY DEMAND CHARGES. DOCUMENT AS PART OF SUBMITTED SEQUENCE OF OPERATIONS.

ABBREVIATIONS

AC - AIR CONDITIONING
ACU - AIR CONDITIONING UNIT
AHU - AIR HANDLING UNIT
AI - ANALOG INPUT
AO - ANALOG OUTPUT
AUTO – AUTOMATIC
AUX – AUXILIARY
DI -DIGITAL INPUT
DO -DIGITAL OUTPUT
C –COMMON
DA - DISCHARGE AIR
EA - EXHAUST AIR
EF - EXHAUST FAN
FCU - FAN COIL UNIT
HOA - HAND / OFF / AUTO
HP - HEAT PUMP
MAX – MAXIMUM
MIN – MINIMUM
MISC – MISCELLANEOUS
NC - NORMALLY CLOSED
NO - NORMALLY OPEN
OA - OUTDOOR AIR
RA - RETURN AIR
RF - RETURN FAN
RH - RELATIVE HUMIDITY
RTU - ROOF-TOP UNIT
SA - SUPPLY AIR
SF - SUPPLY FAN
SP - STATIC PRESSURE
TEMP – TEMPERATURE
VAV - VARIABLE AIR VOLUME
VVTU - VARIABLE VOLUME TERMINAL UNIT
W/ - WITH
W/O – WITHOUT

NOTES:
1. REFER TO PLANS AND FAN COIL SCHEDULE FOR LOCATIONS AND SYSTEM COMPONENTS.
2. EXISTING SPLIT SYSTEM ASSUMED TO OPERATE ON INTERNAL CONTROLS.
3. ADDITIONAL TEMPERATURE SENSOR TO ACT AS HIGH TEMPERATURE ALARM AND TO BE INTEGRATED INTO EXISTING BAS.
4. MOISTURE DETECTOR TO ACT AS HIGH FLOW SWITCH FOR CONDENSATE AND TO BE INTEGRATED INTO EXISTING BAS.

1 SPLIT SYSTEM-CONTROL

SCALE: NONE

Portland State UNIVERSITY

PSU CAPITAL PROJECTS & CONSTRUCTION

RMNC

RICHARD & MAURINE NEUBERGER CENTER

4TH FLOOR SPHR INTERIOR REMODEL

PSU CAMPUS | BLOCK: 087
1600 SW 4TH AVENUE
PORTLAND, OREGON 97201

GLUMAC
A TETRA TECH COMPANY
900 SW Fifth Ave., Suite 1600
Portland, OR 97204
www.glumac.com
T. 503.227.5280
Project Manager: P. Hallowell
Job. No.: 150-26US00253

REGISTERED PROFESSIONAL ENGINEER
100672PE
OREGON
NOVEMBER 12, 2024
PAUL HALLOWELL
EXPIRES: 06/30/27

ISSUED FOR BID & PERMIT

9/4/2026

Sheet Title :
CONTROLS - SCHEMATICS

Revisions : | Date :

Drawn : KC | Checked : WD

Sheet # :

M800

DUAL DUCT VARIABLE AIR VOLUME TERMINAL UNIT – WITHOUT CARBON DIOXIDE (CO2) MONITORING

A. A. FEATURES
   1. COOLING DAMPER AND ACTUATOR
   2. HEATING DAMPER AND ACTUATOR
   3. ALL SETPOINTS SHALL BE USER ADJUSTABLE

B. RUN CONDITIONS - SCHEDULED: THE UNIT SHALL RUN ACCORDING TO A USER DEFINABLE TIME SCHEDULE AND MAINTAIN THE FOLLOWING MODES:
   1. OCCUPIED MODE TEMPERATURES:
      A. COOLING SETPOINT: 76°F
      B. HEATING SETPOINT: 68°F
   2. UNOCCUPIED MODE TEMPERATURES (NIGHT SETBACK):
      A. COOLING SETPOINT: 85°F
      B. HEATING SETPOINT: 55°F
   3. FOUR AIR FLOW CONTROL SETPOINTS SHALL APPLY AS FOLLOWS:
      A. OCCUPIED COOLING MAXIMUM AIR FLOW AS SCHEDULED
      B. OCCUPIED HEATING MAXIMUM AIR FLOW AS SCHEDULED

C. OCCUPIED COOLING/HEATING MINIMUM AIR FLOW AS SCHEDULED

D. UNOCCUPIED COOLING/HEATING MINIMUM AIR FLOW AS SCHEDULED
   1. ALARMS SHALL BE PROVIDED AS FOLLOWS:
      A. HIGH ZONE TEMP: IF THE ZONE TEMPERATURE IS 5°F GREATER THAN THE COOLING SETPOINT.
      B. LOW ZONE TEMP: IF THE ZONE TEMPERATURE IS 5°F LESS THAN THE HEATING SETPOINT.
      C. AIR FLOW CONTROL: THE UNIT SHALL MAINTAIN ZONE SETPOINTS BY CONTROLLING THE AIRFLOW THROUGH ONE OF THE FOLLOWING:
   2. OCCUPIED:
      A. WHEN THE ZONE TEMPERATURE IS GREATER THAN ITS COOLING SETPOINT, THE ZONE DAMPER SHALL MODULATE BETWEEN THE MINIMUM OCCUPIED AIRFLOW AND THE MAXIMUM COOLING AIRFLOW UNTIL THE ZONE IS SATISFIED.
      B. WHEN THE ZONE TEMPERATURE IS BETWEEN THE COOLING SETPOINT AND THE HEATING SETPOINT (DEADBAND), THE ZONE DAMPER SHALL MAINTAIN THE MINIMUM REQUIRED ZONE VENTILATION. THE VOLUME OF AIR IN THE DEADBAND SHALL NOT EXCEED THE LARGER OF 20% OF PEAK PRIMARY AIRFLOW OR THE DESIGN ZONE VENTILATION RATE.
      C. WHEN THE ZONE TEMPERATURE IS LESS THAN ITS HEATING SET-POINT, THE BAS SHALL ENABLE HEATING AND MAINTAIN ROOM TEMPERATURE SETPOINT BY MODULATING THE HEATING DAMPER BETWEEN THE MINIMUM OCCUPIED AIRFLOW AND MAXIMUM HEATING AIRFLOW UNTIL THE ZONE TEMPERATURE IS SATISFIED. THE MAXIMUM VOLUME OF PRIMARY AIR THAT IS ALLOWED TO MIX SHALL NOT EXCEED THE LARGER OF 50% OF PEAK PRIMARY AIRFLOW OR THE DESIGN ZONE VENTILATION RATE.
   3. UNOCCUPIED:
      A. WHEN THE ZONE IS UNOCCUPIED THE VENTILATION ZONE DAMPER SHALL CONTROL TO ITS MINIMUM UNOCCUPIED AIRFLOW, TYPICALLY CLOSED.
      B. WHEN THE ZONE TEMPERATURE IS GREATER THAN ITS COOLING SETPOINT, THE ZONE DAMPER SHALL MODULATE BETWEEN THE MINIMUM UNOCCUPIED AIRFLOW AND THE MAXIMUM COOLING AIRFLOW UNTIL THE ZONE IS SATISFIED.
      C. WHEN THE ZONE TEMPERATURE IS LESS THAN ITS HEATING SETPOINT, THE ZONE DAMPER SHALL MODULATE BETWEEN THE MINIMUM OCCUPIED AIRFLOW AND THE MAXIMUM HEATING AIRFLOW UNTIL THE ZONE IS SATISFIED.

E. DISCHARGE AIR TEMPERATURE: THE BAS SHALL MONITOR THE DISCHARGE AIR TEMPERATURE.

F. OCCUPANCY SENSOR OPERATION (WHERE EQUIPPED):
   1. WHEN SPACE IS OCCUPIED THE TERMINAL UNIT CONTROL SEQUENCE SHALL FUNCTION AS PREVIOUSLY STATED FOR THE OCCUPIED MODE.
   2. WHEN SPACE IS UNOCCUPIED THE TERMINAL UNIT CONTROL SEQUENCE SHALL FUNCTION AS PREVIOUSLY STATED FOR UNOCCUPIED MODE.

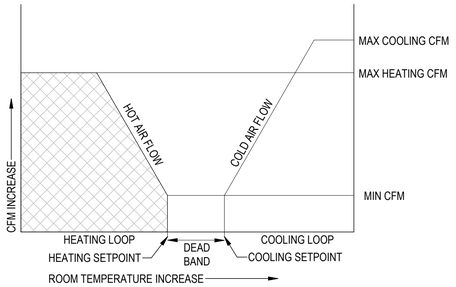

NOTES:
1. IN THE COOLING MODE, AS THE ROOM TEMPERATURE INCREASES, THE UNIT MODULATES THE COLD AIRFLOW FROM THE MINIMUM TO THE MAXIMUM COOLING SETTING.
2. IN THE HEATING MODE, THE UNIT REFERENCES THE ALTERNATE (HIGHER) MINIMUM AIRFLOW. AS THE ROOM TEMPERATURE DECREASES, THE UNIT MODULATES THE AIRFLOW FROM THE HEATING MINIMUM TO MAXIMUM. THE VALVE OPERATES ONLY IN THE HEATING MODE.

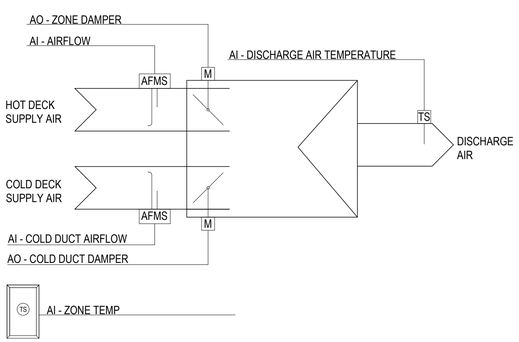

NOTES:
1. ALL CONTROL POINTS TO BE CONNECTED DIRECTLY TO UNIT MOUNTED CONTROLLER WITH INTERFACE TO BAS COMMUNICATION BUSS.
2. VAV CONTROL FOR TYPICAL SYSTEMS WITHOUT DEMAND CONTROL VENTILATION.

2 DUAL DUCT VAV TERMINAL NO DCV -CONTROL

SCALE: NONE

DUAL DUCT VARIABLE AIR VOLUME TERMINAL UNIT – WITH CARBON DIOXIDE (CO2) MONITORING

A. FEATURES
   1. COOLING DAMPER AND ACTUATOR
   2. HEATING DAMPER AND ACTUATOR
   3. CARBON DIOXIDE MONITORING
   4. ALL SETPOINTS SHALL BE USER ADJUSTABLE

B. RUN CONDITIONS - SCHEDULED: THE UNIT SHALL RUN ACCORDING TO A USER DEFINABLE TIME SCHEDULE AND MAINTAIN THE FOLLOWING MODES:
   1. OCCUPIED MODE TEMPERATURES:
      A. COOLING SETPOINT: 76°F
      B. HEATING SETPOINT: 68°F
   2. UNOCCUPIED MODE TEMPERATURES (NIGHT SETBACK):
      A. COOLING SETPOINT: 85°F
      B. HEATING SETPOINT: 55°F
   3. FOUR AIR FLOW CONTROL SETPOINTS SHALL APPLY AS FOLLOWS:
      A. OCCUPIED COOLING MAXIMUM AIR FLOW AS SCHEDULED
      B. OCCUPIED HEATING MAXIMUM AIR FLOW AS SCHEDULED
      C. OCCUPIED COOLING/HEATING MINIMUM AIR FLOW AS SCHEDULED
      D. UNOCCUPIED COOLING/HEATING MINIMUM AIR FLOW AS SCHEDULED
   4. ALARMS SHALL BE PROVIDED AS FOLLOWS:
      A. HIGH ZONE TEMP: IF THE ZONE TEMPERATURE IS 5°F GREATER THAN THE COOLING SETPOINT.
      B. LOW ZONE TEMP: IF THE ZONE TEMPERATURE IS 5°F LESS THAN THE HEATING SETPOINT.

C. MINIMUM VENTILATION ON CARBON DIOXIDE (CO2) CONCENTRATION: WHEN IN THE OCCUPIED MODE, THE BAS SHALL MEASURE THE ZONE CO2 LEVELS AND MODULATE THE VENTILATION ZONE DAMPER, COOLING OR HEATING DAMPERS DEPENDING ON SYSTEM CONFIGURATION, OPEN ON RISING CO2 CONCENTRATIONS, OVERRIDING NORMAL DAMPER OPERATION TO MAINTAIN A CO2 SETPOINT OF NOT MORE THAN 600 PPM ABOVE AMBIENT OUTSIDE AIR CO2 CONCENTRATION.
   1. ALARMS SHALL BE PROVIDED AS FOLLOWS:
      A. HIGH ZONE CARBON DIOXIDE CONCENTRATION: IF THE ZONE CO2 CONCENTRATION IS GREATER THAN 1000 PPM.
      B. ZONE SETPOINT ADJUST: THE OCCUPANT SHALL BE ABLE TO ADJUST THE ZONE TEMPERATURE HEATING AND COOLING SETPOINTS AT THE ZONE SENSOR.
      C. ZONE UNOCCUPIED OVERRIDE: A TIMED LOCAL OVERRIDE CONTROL SHALL ALLOW AN OCCUPANT TO OVERRIDE THE SCHEDULE AND PLACE THE UNIT INTO AN OCCUPIED MODE FOR AN ADJUSTABLE PERIOD OF TIME. AT THE EXPIRATION OF THIS TIME, CONTROL OF THE UNIT SHALL AUTOMATICALLY RETURN TO THE SCHEDULE.

D. AIR FLOW CONTROL: THE UNIT SHALL MAINTAIN ZONE SETPOINTS BY CONTROLLING THE AIRFLOW THROUGH ONE OF THE FOLLOWING:
   1. OCCUPIED:
      A. WHEN THE ZONE TEMPERATURE IS GREATER THAN ITS COOLING SETPOINT, THE ZONE DAMPER SHALL MODULATE BETWEEN THE MINIMUM OCCUPIED AIRFLOW AND THE MAXIMUM COOLING AIRFLOW UNTIL THE ZONE IS SATISFIED.
      B. WHEN THE ZONE TEMPERATURE IS BETWEEN THE COOLING SETPOINT AND THE HEATING SETPOINT (DEADBAND), THE ZONE DAMPER SHALL MAINTAIN THE MINIMUM REQUIRED ZONE VENTILATION. THE VOLUME OF AIR IN THE DEADBAND SHALL NOT EXCEED THE LARGER OF 20% OF PEAK PRIMARY AIRFLOW OR THE DESIGN ZONE VENTILATION RATE.
      C. WHEN THE ZONE TEMPERATURE IS LESS THAN ITS HEATING SET-POINT, THE BAS SHALL ENABLE HEATING AND MAINTAIN ROOM TEMPERATURE SETPOINT BY MODULATING THE HEATING DAMPER BETWEEN THE MINIMUM OCCUPIED AIRFLOW AND MAXIMUM HEATING AIRFLOW UNTIL THE ZONE TEMPERATURE IS SATISFIED. THE MAXIMUM VOLUME OF PRIMARY AIR THAT IS ALLOWED TO MIX SHALL NOT EXCEED THE LARGER OF 50% OF PEAK PRIMARY AIRFLOW OR THE DESIGN ZONE VENTILATION RATE.
   2. UNOCCUPIED:
      A. WHEN THE ZONE IS UNOCCUPIED THE VENTILATION ZONE DAMPER SHALL CONTROL TO ITS MINIMUM UNOCCUPIED AIRFLOW, TYPICALLY CLOSED.
      B. WHEN THE ZONE TEMPERATURE IS GREATER THAN ITS COOLING SETPOINT, THE ZONE DAMPER SHALL MODULATE BETWEEN THE MINIMUM UNOCCUPIED AIRFLOW AND THE MAXIMUM COOLING AIRFLOW UNTIL THE ZONE IS SATISFIED.
      C. WHEN THE ZONE TEMPERATURE IS LESS THAN ITS HEATING SETPOINT, THE ZONE DAMPER SHALL MODULATE BETWEEN THE MINIMUM OCCUPIED AIRFLOW AND THE MAXIMUM HEATING AIRFLOW UNTIL THE ZONE IS SATISFIED.

E. DISCHARGE AIR TEMPERATURE: THE BAS SHALL MONITOR THE DISCHARGE AIR TEMPERATURE.

F. OCCUPANCY SENSOR OPERATION (WHERE EQUIPPED):
   1. WHEN SPACE IS OCCUPIED THE TERMINAL UNIT CONTROL SEQUENCE SHALL FUNCTION AS PREVIOUSLY STATED FOR THE OCCUPIED MODE.
   2. WHEN SPACE IS UNOCCUPIED THE TERMINAL UNIT CONTROL SEQUENCE SHALL FUNCTION AS PREVIOUSLY STATED FOR UNOCCUPIED MODE.

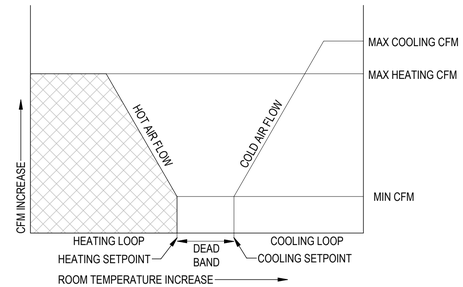

NOTES:
1. IN THE COOLING MODE, AS THE ROOM TEMPERATURE INCREASES, THE UNIT MODULATES THE COLD AIRFLOW FROM THE MINIMUM TO THE MAXIMUM COOLING SETTING.
2. IN THE HEATING MODE, THE UNIT REFERENCES THE ALTERNATE (HIGHER) MINIMUM AIRFLOW. AS THE ROOM TEMPERATURE DECREASES, THE UNIT MODULATES THE AIRFLOW FROM THE HEATING MINIMUM TO MAXIMUM. THE VALVE OPERATES ONLY IN THE HEATING MODE.

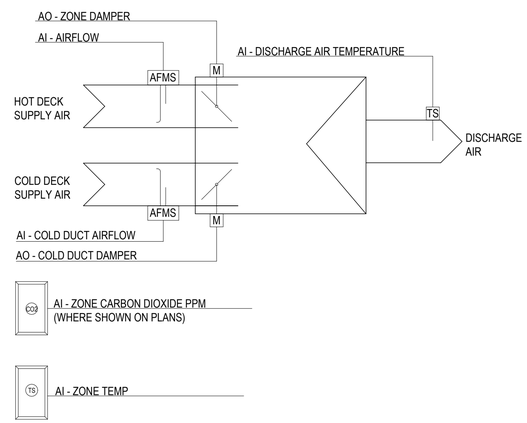

NOTES:
1. ALL CONTROL POINTS TO BE CONNECTED DIRECTLY TO UNIT MOUNTED CONTROLLER WITH INTERFACE TO BAS COMMUNICATION BUSS.
2. VAV CONTROL FOR TYPICAL SYSTEMS WITH DEMAND CONTROL VENTILATION.

1 DUAL DUCT VAV TERMINAL W/DCV -CONTROL

SCALE: NONE

Portland State UNIVERSITY

PSU CAPITAL PROJECTS & CONSTRUCTION

RMNC

RICHARD & MAURINE NEUBERGER CENTER

4TH FLOOR SPHR INTERIOR REMODEL

PSU CAMPUS | BLOCK: 087
1600 SW 4TH AVENUE
PORTLAND, OREGON 97201

GLUMAC
A TETRA TECH COMPANY
900 SW Fifth Ave., Suite 1600
Portland, OR 97204
www.glumac.com
T. 503.227.5280
Project Manager: P. Hallowell
Job. No.: 150-26US00253

REGISTERED PROFESSIONAL ENGINEER
100672PE
OREGON
NOVEMBER 12, 2024
PAUL HALLOWELL
EXPIRES: 06/30/27

ISSUED FOR BID & PERMIT

9/4/2026

Sheet Title :

CONTROLS - SEQUENCES OF OPERATION

Revisions : | Date :

Drawn : KC | Checked : WD

Sheet # :

M801

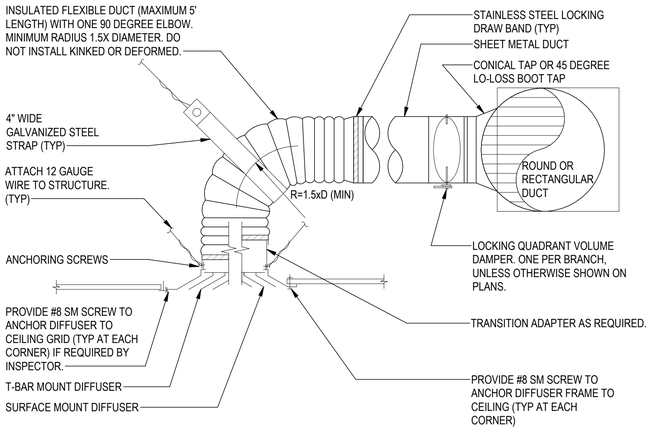

NOTES:
1. ACCESS TO BALANCING DAMPER MAY BE PROVIDED THRU REMOVABLE RETURN AIR REGISTER OR HINGED LIGHT FIXTURE.
2. FOR INACCESSIBLE CEILING USE REMOTE FLEXIBLE STEEL SHAFT DAMPER OPERATOR OR PROVIDE 18"x18" (MIN) ACCESS DOOR.
3. DIFFUSER FRAME SHALL MATCH ARCHITECTURAL CEILING TYPE.
4. IF FLEXIBLE DUCT SIZE INDICATED ON PLAN IS LARGER OR SMALLER THAN DIFFUSER NECK OR IF DIFFUSER NECK IS SQUARE OR RECTANGULAR PROVIDE TRANSITION FITTING AT DIFFUSER NECK.
5. REFER TO STRUCTURAL DESIGN FOR ATTACHMENT REQUIREMENTS AND ADDITIONAL SUPPORT OPTIONS.

7 CEILING DIFFUSER MOUNTING FLEXIBLE

SCALE: NONE

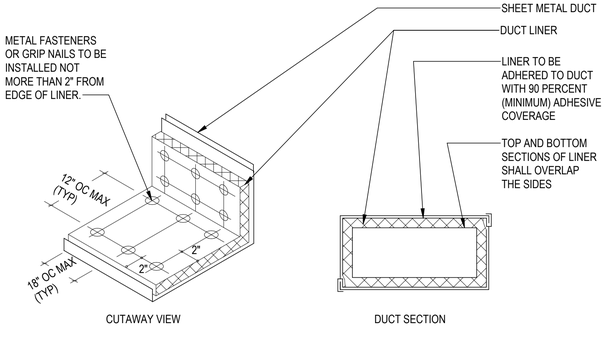

NOTES:
1. PROVIDE DUCT LINER AT LOCATIONS SHOWN ON DRAWINGS.
2. REFER TO SPECIFICATIONS FOR ADDITIONAL REQUIREMENTS.
3. ALL ENDS OF LINER TO BE COATED WITH ADHESIVE. ENDS OF LINER SHALL BE BUTTED FIRMLY TOGETHER.

6 DUCT LINER

SCALE: NONE

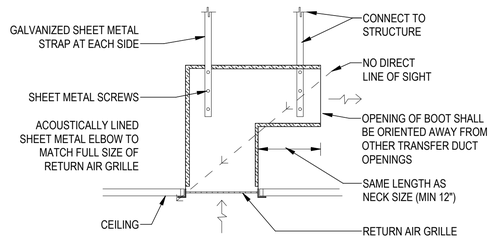

NOTES:
1. REFER TO PLANS FOR SIZES AND CONTINUATION.

5 RETURN PLENUM BOOT - LINED ELBOW

SCALE: NONE

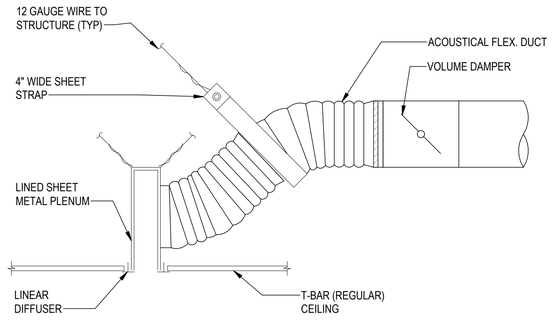

NOTES:
1. REFER TO PLANS FOR SIZES AND CONTINUATION.

4 LINEAR DIFFUSER

SCALE: NONE

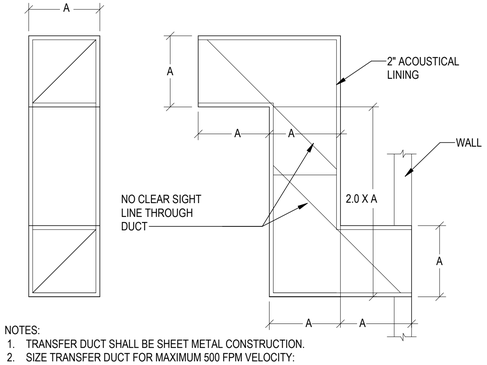

NOTES:
1. TRANSFER DUCT SHALL BE SHEET METAL CONSTRUCTION.
2. SIZE TRANSFER DUCT FOR MAXIMUM 500 FPM VELOCITY:
   A = 14", 500 CFM
   A = 20", 1125 CFM
   A = 26", 2000 CFM

3 TRANSFER DUCT

SCALE: NONE

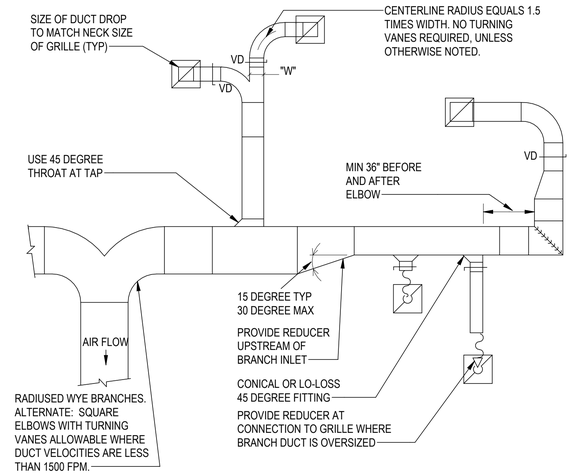

NOTES:
1. PROVIDE DUCT LINER AND/OR EXTERNAL DUCT INSULATION AS NOTED ON PLANS OR IN SPECIFICATIONS.
2. PROVIDE HANGERS AND SEISMIC BRACING PER SMACNA AND BUILDING CODE.
3. LOCATE MANUAL BALANCING DAMPERS IMMEDIATELY DOWNSTREAM OF EACH DUCT TAP.
4. MAINTAIN MINIMUM 36" CLEARANCE BETWEEN LEADING OR TRAILING ELBOW JOINT AND DUCT TAP FITTINGS.
5. TURNING VANES REQUIRED ON RECTANGULAR DUCT SYSTEM ELBOWS. SINGLE THICKNESS VANES UP TO 25" HEIGHT AND DOUBLE THICKNESS VANES IN DUCTS GREATER THAN 25" HEIGHT. RADIUSED ELBOWS MAY BE USED AS AN ALTERNATE.
6. NO TURNING VANES REQUIRED ON DUCT SIZES LESS THAN 180 SQ. IN. IF DUCT VELOCITY IS LESS THAN 1500 FPM.

2 EXHAUST DUCT FITTINGS

SCALE: NONE

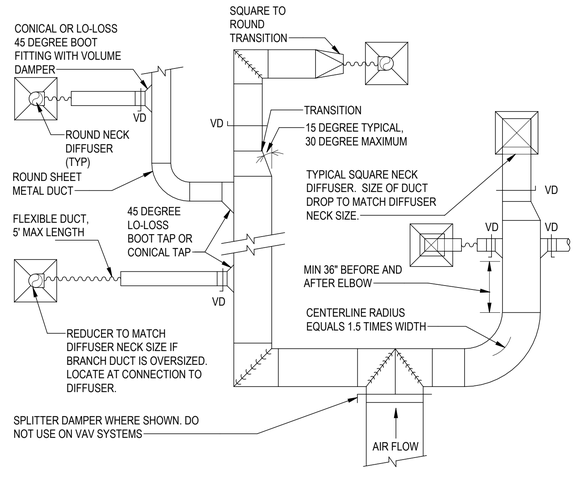

NOTES:
1. PROVIDE DUCT LINER AND/OR EXTERNAL DUCT INSULATION AS NOTED ON PLANS OR IN SPECIFICATIONS.
2. PROVIDE HANGERS AND SEISMIC BRACING PER SMACNA AND BUILDING CODE REQUIREMENTS.
3. LOCATE MANUAL BALANCING DAMPERS IMMEDIATELY DOWNSTREAM OF EACH DUCT TAP.
4. CUSHION HEADS OR BULLHEAD TEES ARE NOT ALLOWED.
5. MAINTAIN MINIMUM 36" CLEARANCE BETWEEN LEADING OR TRAILING ELBOW JOINT AND DUCT TAP FITTINGS.
6. RADIUSED ELBOWS OR TURNING VANES REQUIRED ON RECTANGULAR DUCT SYSTEM ELBOWS. SINGLE THICKNESS VANES UP TO 25" HEIGHT AND DOUBLE THICKNESS VANES IN DUCTS GREATER THAN 25" HEIGHT.

1 SUPPLY DUCT FITTINGS

SCALE: NONE

Portland State UNIVERSITY

PSU CAPITAL PROJECTS & CONSTRUCTION

RMNC

RICHARD & MAURINE NEUBERGER CENTER

4TH FLOOR SPHR INTERIOR REMODEL

PSU CAMPUS | BLOCK: 087
1600 SW 4TH AVENUE
PORTLAND, OREGON 97201

GLUMAC
A TETRA TECH COMPANY
900 SW Fifth Ave., Suite 1600
Portland, OR 97204
www.glumac.com
T. 503.227.5280
Project Manager: P. Hallowell
Job. No.: 150-26US00253

REGISTERED PROFESSIONAL ENGINEER
100672PE
OREGON
NOVEMBER 12, 2024
PAUL HALLOWELL
EXPIRES: 06/30/27

ISSUED FOR BID & PERMIT

9/4/2026

Sheet Title :

MECHANICAL DETAILS

Revisions :	Date :

Drawn : KC Checked : WD

Sheet # :

M900

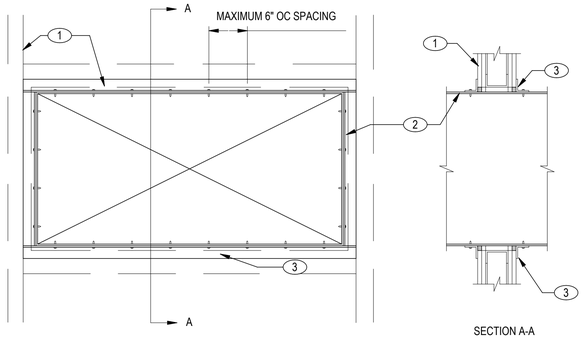

NOTES:
1. WALL ASSEMBLY: GYPSUM WALLBOARD/STUD WALL ASSEMBLY.
2. THROUGH PENETRATION: ONE STEEL DUCT TO BE INSTALLED EITHER CONCENTRICALLY OR ECCENTRICALLY WITHIN THE WALL OPENING. THE ANNULAR SPACE BETWEEN DUCT AND OPENING SHALL BE MIN OF 1/2" TO MAXIMUM OF 2". WHERE DUCT CONTINUES THROUGH THE WALL, STEEL DUCT TO BE RIGIDLY SUPPORTED ON BOTH SIDES OF WALL ASSEMBLY. WHERE DUCT TERMINATES IN WALL FOR AIR TRANSFER PATH, STEEL DUCT TO BE RIGIDLY SUPPORTED ON ONE SIDE OF WALL ASSEMBLY.
3. FILL, VOID OR CAVITY MATERIAL-CAULK OR SEALANT: MINIMUM 1-1/4" THICKNESS OF CAULK MATERIAL APPLIED WITHIN ANNULUS, FLUSH WITH BOTH SURFACES OF WALL ASSEMBLY, AT THE POINT CONTACT LOCATION BETWEEN DUCT AND WALLBOARD, A MINIMUM 1/4" DIAMETER BEAD OF CAULK SHALL BE APPLIED AT THE WALLBOARD/DUCT INTERFACE ON BOTH SURFACES OF THE WALL ASSEMBLY. OPENING TO BE "FRAMED OUT" WITH LIGHTGAUGE METAL FRAMING STUDS.

6 RECTANGULAR DUCT PENETRATION FRAMED WALL

SCALE: NONE

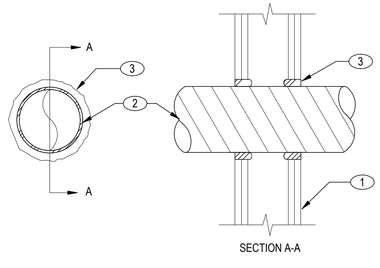

NOTES:
1. WALL ASSEMBLY: THE GYPSUM WALLBOARD/STUD WALL ASSEMBLY.
2. THROUGH PENETRATION: ONE STEEL DUCT TO BE INSTALLED EITHER CONCENTRICALLY OR ECCENTRICALLY WITHIN THE WALL OPENING. THE ANNULAR SPACE BETWEEN DUCT AND OPENING SHALL BE MIN OF 1/2" TO MAXIMUM OF 1-1/2". STEEL DUCT TO BE RIGIDLY SUPPORTED ON BOTH SIDES OF WALL ASSEMBLY.
3. FILL, VOID OR CAVITY MATERIAL-CAULK OR SEALANT: MINIMUM 1-1/4" THICKNESS OF CAULK MATERIAL APPLIED WITHIN ANNULUS, FLUSH WITH BOTH SURFACES OF WALL ASSEMBLY. AT THE POINT CONTACT LOCATION BETWEEN DUCT AND WALLBOARD, A MINIMUM 1/4" DIAMETER BEAD OF CAULK SHALL BE APPLIED AT THE WALLBOARD/DUCT INTERFACE ON BOTH SURFACES OF THE WALL ASSEMBLY.

5 ROUND DUCT PENETRATION FRAMED WALL

SCALE: NONE

FOR DRAW-THROUGH COIL ARRANGEMENTS:

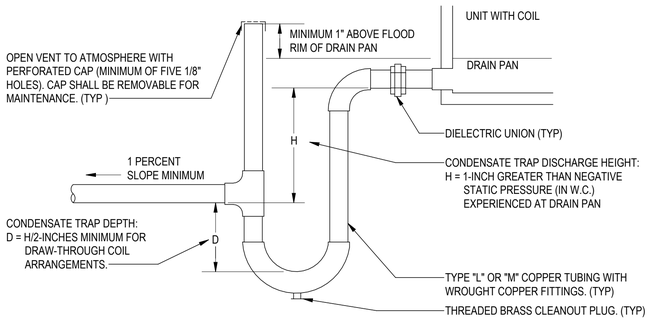

FOR BLOW-THROUGH COIL ARRANGEMENTS:

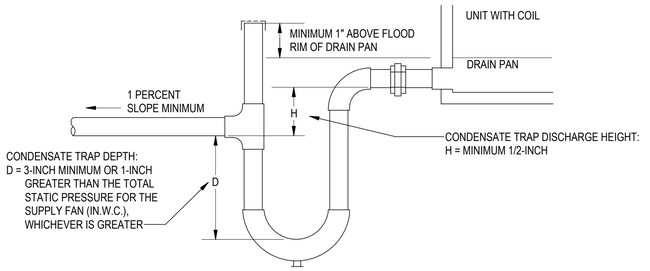

NOTES:
1. ALL REFERENCES TO ITEMS LABELED AS (TYP) REFER TO BOTH THE BLOW-THROUGH AND DRAW-THROUGH DETAIL
2. CONTRACTOR SHALL BE RESPONSIBLE FOR CORRECT APPLICATION OF THIS DETAIL WITH ACTUAL EQUIPMENT PURCHASED
3. VERIFY CONDENSATE TRAP DESIGN WITH FAN COIL MANUFACTURER'S REQUIREMENTS
4. CONDENSATE PIPE TERMINATION SHALL BE LOCATED A MINIMUM OF 1" ABOVE THE FLOOD RIM OF AN APPROVED TRAPPED RECEPTOR, LANDSCAPING AREA OR OTHER LOCATION AS APPROVED BY THE AUTHORITY HAVING JURISDICTION.
5. ALL INTERIOR CONDENSATE DRAIN PIPING ABOVE CEILINGS SHALL BE INSULATED.
6. PROVIDE PIPE SUPPORTS AS REQUIRED TO MAINTAIN MINIMUM 1% SLOPE.
7. INSTALL TRAP PARALLEL TO UNIT, IF POSSIBLE.
8. MINIMUM CONDENSATE PIPE SIZES SHALL BE PER THE FOLLOWING TABLE UNLESS LARGER SIZE IS SHOWN ON PLANS OR AS REQUIRED BY AUTHORITY HAVING JURISDICTION AND/OR LOCAL BUILDING CODE REQUIREMENTS.

CAPACITY	SIZE
UP TO 20 TONS	3/4"

4 COOLING COIL CONDENSATE TRAP

SCALE: NONE

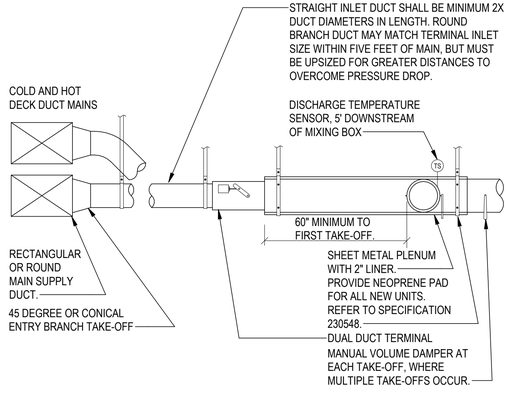

NOTES:
1. CONTRACTOR MUST PROVIDE OVERSIZED SHEET METAL OUTLET PLENUM LINED WITH 2" THICK INSULATION WITH FIBER-FREE LINER FOR ACOUSTICAL ATTENUATION AND TO MINIMIZE HEAT TRANSFER. INSIDE CLEAR DIMENSIONS SHALL BE 2" TALLER THAN TERMINAL UNIT OUTLET HEIGHT AND 4" WIDER THAN TERMINAL UNIT OUTLET WIDTH TO MINIMIZE NOISE TRANSMISSION THROUGH DUCTWORK TO DIFFUSERS.
2. MAINTAIN ADEQUIATE CLEARANCE FOR EASILY ACCESS TO MAINTAIN DAMPERS AND CONTROLS.
3. LENGTH OF PLENUM SHALL BE LONG ENOUGH TO ALLOW FOR MINIMUM FIVE FOOT DISTANCE BETWEEN TERMINAL DAMPER AND FIRST DUCT CONNECTION. PLENUM MAY BE EXTENDED TO ACCOMMODATE ADDITIONAL DUCT CONNECTIONS.

3 DUAL DUCT VAV TERMINAL

SCALE: NONE

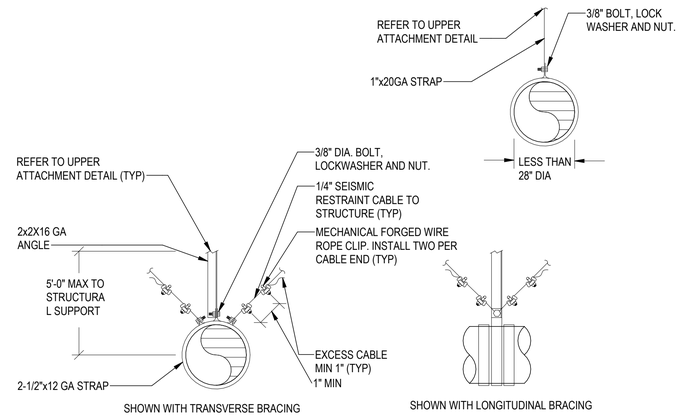

NOTES:
1. HANGERS SHALL BE INSTALLED AT EVERY CHANGE OF DIRECTION AND NO MORE THAN 10'-0" APART.
2. PROVIDE A FLEXIBLE CONNECTION BETWEEN MECHANICAL EQUIPMENT AND DUCT.
3. STRAP MAY BE REDUCED TO 1"x22 GA FOR DUCT 24" DIA. AND LESS IN DIAMETER.
4. SEISMIC RESTRAINT CABLES MAY BE OMITTED WHERE DUCT IS SUPPORTED WITHIN 12" OF STRUCTURE AS MEASURED FROM THE TOP OF DUCT TO THE BOTTOM OF STRUCTURE.
5. VERTICAL HANGERS, DIAGONAL AND HORIZONTAL BRACES TO BE SIZED IN ACCORDANCE WITH SMACNA SEISMIC RESTRAINT MANUAL.
6. COORDINATE WITH STRUCTURAL ENGINEER FOR UPPER ATTACHMENTS.
7. WHERE SEISMIC CABLE RESTRAINTS ARE REQUIRED,
   A. PROVIDE SEISMIC CABLE TRANSVERSE BRACING AT 30 FT AND
   B. SEISMIC CABLE LONGITUDINAL BRACING AT 60 FT.
   C. SEISMIC CABLE RESTRAINTS ARE NOT REQUIRED AT EVERY HANGER LOCATION.

2 ROUND DUCT SUPPORT

SCALE: NONE

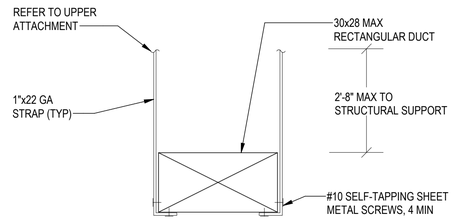

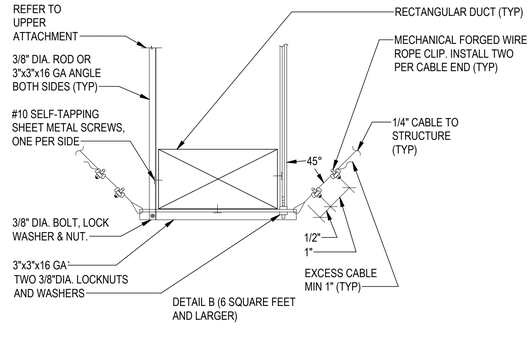

NOTES:
1. MAXIMUM SPACING OF HANGERS SHALL BE 5'-0".
2. SEISMIC RESTRAINT CABLES MAY BE OMITTED WHERE:
   A. RECTANGULAR DUCT IS LESS THAN 6 SQUARE FEET IN AREA OR DUCT OF ANY SIZE IS SUPPORTED WITHIN 12" OF STRUCTURE AS MEASURED FROM THE TOP OF DUCT TO THE BOTTOM OF STRUCTURE.
3. WHERE SEISMIC RESTRAINTS ARE REQUIRED,
   A. PROVIDE TRANSVERSE BRACING AT 30 FT AND
   B. LONGITUDINAL BRACING AT 60 FT.
4. VERTICAL HANGERS, DIAGONAL AND HORIZONTAL BRACES TO BE SIZED IN ACCORDANCE WITH SMACNA SEISMIC RESTRAINT MANUAL.
5. COORDINATE WITH STRUCTURAL DESIGN FOR UPPER ATTACHMENT.

1 RECT DUCT SUPPORT

SCALE: NONE

Portland State UNIVERSITY

PSU CAPITAL PROJECTS & CONSTRUCTION

RMNC

RICHARD & MAURINE NEUBERGER CENTER

4TH FLOOR SPHR INTERIOR REMODEL

PSU CAMPUS | BLOCK: 087
1600 SW 4TH AVENUE
PORTLAND, OREGON 97201

GLUMAC
A TETRA TECH COMPANY
900 SW Fifth Ave., Suite 1600
Portland, OR 97204
www.glumac.com
T. 503.227.5280
Project Manager: P. Hallowell
Job. No.: 150-26US00253

REGISTERED PROFESSIONAL ENGINEER
100672PE
OREGON
NOVEMBER 12, 2024
PAUL HALLOWELL
EXPIRES: 06/30/27

ISSUED FOR BID & PERMIT

9/4/2026

Sheet Title :

MECHANICAL DETAILS

Revisions :	Date :

Drawn : KC Checked : WD

Sheet # :

M901

GENERAL NOTES

1. THESE GENERAL NOTES APPLY TO ALL SHEETS.
2. CONTRACT DOCUMENT DRAWINGS ARE DIAGRAMMATIC AND ARE INTENDED TO CONVEY SCOPE AND GENERAL ARRANGEMENT ONLY. DO NOT SCALE FOR MATERIAL QUANTITIES. ALL SCALING SHOULD BE REFERENCED TO ARCHITECTURAL PLANS ONLY.
3. COORDINATE CONSTRUCTION OF ALL PLUMBING WORK WITH ALL OTHER DISCIPLINES AND AS SHOWN ON OTHER CONTRACT DOCUMENT DRAWINGS. OFFSETS IN PIPING AROUND OBSTRUCTIONS SHALL BE PROVIDED AT NO ADDITIONAL COST TO THE OWNER.
4. CONTRACTOR TO PROVIDE ALL MATERIALS AND EQUIPMENT AND PERFORM ALL LABOR REQUIRED TO INSTALL COMPLETE AND OPERABLE PLUMBING SYSTEMS AS INDICATED ON THE DRAWINGS, AS SPECIFIED, AND AS REQUIRED BY CODE.
5. CONTRACTOR SHALL VISIT SITE AND VERIFY ALL EXISTING CONDITIONS AND CONNECTIONS TO EXISTING WORK PRIOR TO BIDDING AND CONSTRUCTION. COORDINATE WITH OWNER`S REPRESENTATIVE WHEN FIELD CONDITIONS PREVENT CORRECT INSTALLATION.
6. THE LOCATION OF EXISTING UTILITIES ARE SHOWN IN APPROXIMATE LOCATIONS. THE CONTRACTOR SHALL DETERMINE THE EXACT LOCATION OF ALL EXISTING UTILITIES BEFORE COMMENCING WORK. THE CONTRACTOR SHALL PAY FOR AND REPAIR ALL DAMAGE CAUSED BY FAILURE TO EXACTLY LOCATE AND PRESERVE ANY AND ALL UTILITIES.
7. CONTRACTOR SHALL OBTAIN AND PAY FOR ALL REQUIRED FEES, PERMITS AND INSPECTIONS. OBTAIN ALL FIELD APPROVALS ON WORK FROM REGULATING AGENCIES WHERE REQUIRED.
8. DURING ENTIRE CONSTRUCTION PERIOD MAINTAIN ADEQUATE TYPE 2A:40BC FIRE EXTINGUISHERS READY FOR USE IN CASE OF FIRE.
9. PROTECTION OF PUBLIC: THE CONTRACTOR SHALL PROTECT THE PUBLIC FROM INJURY DURING THE WORK BY POSTING WARNING SIGNS, GUARD LIGHTS AND BARRICADES.
10. COORDINATE ALL WORK WITH OTHER TRADES AND AVOID IMPACTING ARCHITECTURAL AND STRUCTURAL MEMBERS. NO WORK SUCH AS PIPE, DUCTWORK, ETC., SHALL BE IN CONTACT WITH ANY EQUIPMENT OR BUILDING MEMBERS.
11. COORDINATE ALL CUTTING AND PATCHING WITH GENERAL CONTRACTOR AND OTHER DISCIPLINES. CONTRACTOR SHALL BE RESPONSIBLE FOR ALL CUTTING AND PATCHING RELATED TO THEIR WORK.
12. DRAWINGS THAT INDICATE EXISTING ITEMS FOR RELOCATION (ER) SHALL BE REMOVED, STORED, CLEANED, PROTECTED FROM DAMAGE AND INSTALLED IN NEW LOCATIONS AS INDICATED ON DRAWINGS.
13. ALL ATTACHMENTS TO THE BUILDING STRUCTURE SHALL BE COORDINATED WITH THE STRUCTURAL DESIGN.
14. OBTAIN WRITTEN PERMISSION OF STRUCTURAL ENGINEER BEFORE PROCEEDING WITH ANY CUTTING OR PATCHING OF STRUCTURAL SYSTEMS. DO NOT CUT ROOF FRAMING.
15. REFER TO STRUCTURAL PLANS FOR SEISMIC ATTACHMENT REQUIREMENTS PER SECTION 1613 OF THE BUILDING CODE.
16. THE LOCATIONS OF ALL ITEMS SHOWN ON THE DRAWINGS OR CALLED FOR IN THE SPECIFICATIONS THAT ARE NOT DEFINITELY FIXED BY DIMENSIONS ARE APPROXIMATE ONLY. THE EXACT LOCATIONS NECESSARY TO SECURE THE BEST CONDITIONS AND RESULTS MUST BE DETERMINED BY THE PROJECT SITE CONDITIONS AND SHALL HAVE THE APPROVAL OF THE OWNER`S REPRESENTATIVE BEFORE BEING INSTALLED. DO NOT SCALE DRAWINGS.
17. ALL MISCELLANEOUS STEEL REQUIRED TO ENSURE PROPER INSTALLATION SHALL BE FURNISHED AND INSTALLED BY THE PLUMBING CONTRACTOR.
18. ALL PIPING AND EQUIPMENT SUPPORTED FROM STRUCTURAL STEEL SHALL BE COORDINATED WITH GENERAL CONTRACTOR. ALL ATTACHMENTS TO STEEL BAR JOISTS, TRUSSES, OR JOIST GIRDERS SHALL BE AT PANEL POINTS. PROVIDE BEAM CLAMPS MEETING MSS STANDARDS. WELDING TO STRUCTURAL MEMBERS IS NOT PERMITTED. THE USE OF C-CLAMPS IS NOT PERMITTED.
19. THESE PLANS AND ACCOMPANYING SPECIFICATIONS HAVE BEEN DESIGNED TO SHOW SUBSTANTIAL COMPLIANCE WITH THE APPLICABLE PLUMBING CODE AND BUILDING ENERGY EFFICIENCY CODE. ALL EQUIPMENT SHALL MEET THE REQUIREMENTS OF THE BUILDING ENERGY EFFICIENCY CODE.
20. WHERE TWO OR MORE ITEMS OF THE SAME TYPE OF EQUIPMENT ARE REQUIRED, THE PRODUCT OF ONE MANUFACTURER SHALL BE USED.
21. REFER TO ARCHITECTURAL DRAWINGS FOR LOCATIONS, ROUGH IN DIMENSIONS, AND MOUNTING HEIGHTS OF ALL FIXTURES, EQUIPMENT, ACCESS PANELS, CLEANOUTS, AND OTHER EXPOSED PLUMBING ELEMENTS. WHERE DIMENSIONS ARE NOT INDICATED, COORDINATE WITH OWNER`S REPRESENTATIVE PRIOR TO INSTALLATION.
22. THE CONTRACTOR SHALL BE RESPONSIBLE FOR VERIFYING CURRENT REQUIREMENTS WITH THE MANUFACTURER OF THE PRODUCTS USED ON THE PROJECT AND NOTIFY THE OWNER`S REPRESENTATIVE IF ANY DISCREPANCIES ARE FOUND BEFORE THE PURCHASE OF THE PRODUCT AND PRIOR TO INSTALLATION WORK OF ANY OWNER-FURNISHED PRODUCTS.
23. CONTRACTOR SHALL PROVIDE DUST COVERS AT ALL EXPOSED PIPING OPENINGS DURING CONSTRUCTION. BROOM CLEAN WORK AREA ON A DAILY BASIS TO MINIMIZE DUST AND DEBRIS WITHIN THE CONSTRUCTION AREA.
24. LOCATIONS AND SIZES OF ALL FLOOR, WALL, AND ROOF OPENINGS SHALL BE COORDINATED WITH ALL OTHER TRADES INVOLVED.
25. REFER TO ARCHITECTURAL DRAWINGS FOR LOCATIONS OF ALL FIRE AND SMOKE RATED ASSEMBLIES. PROVIDE UL LISTED SEALANT SYSTEM AT ALL LOCATIONS WHERE PIPING PENETRATES FIRE OR SMOKE RATED ASSEMBLIES (WALLS AND FLOORS).
26. PROVIDE WATER PROOF SEALANT AT FLOOR PENETRATIONS.
27. THESE DRAWINGS DO NOT INCLUDE ALL NECESSARY SAFETY REQUIREMENTS. CONTRACTOR TO COMPLY WITH SAFETY REQUIREMENTS SET FORTH BY THE LOCAL AUTHORITIES HAVING JURISDICTION.
28. ALL PLUMBING WORK SHALL BE INSTALLED AS TO AVOID INTERFERENCE WITH OTHER TRADES.
29. ALL VALVES, STRAINERS, WATER CONTROL DEVICES, ETC. SHALL BE THE SAME SIZE AS PIPING SERVED UNLESS NOTED OTHERWISE.
30. ALL PIPING SHALL BE SUPPORTED SO AS NOT TO CONTACT ANY PORTION OF THE SUSPENDED CEILING SYSTEMS, STUDS/GYPSUM BOARD/NOISE CONTROL ELEMENTS OF THE OVERALL STRUCTURE. TRAPEZES OR OTHER DEVICES SHALL BE USED WHERE PIPING INTERFACES WITH THE NORMAL SPACING OF HANGER WIRES FOR CEILING SYSTEMS.
31. RUN ALL SOIL WASTE AND VENT PIPING WITH 2% MINIMUM GRADE UNLESS OTHERWISE NOTED. HORIZONTAL VENT PIPING SHALL BE GRADED TO DRIP BACK TO THE SOIL OR WASTE PIPE BY GRAVITY.
32. PROVIDE SHUTOFF VALVES IN ALL DOMESTIC WATER PIPING SYSTEM BRANCHES IN WHICH BRANCH PIPING SERVES TWO OR MORE FIXTURES.
33. INSTALL PIPING SO THAT ALL VALVES, STRAINERS, UNIONS, TRAPS, FLANGES, AND OTHER APPURTENANCES REQUIRING ACCESS ARE ACCESSIBLE.
34. WHERE DOMESTIC COLD AND HOT WATER PIPING DROPS INTO A PIPE CHASE OR PIPE HEADER SERVING MULTIPLE FIXTURES, THE SIZE SHOWN FOR THE PIPE DROPS SHALL BE USED TO THE LAST FIXTURE, UNLESS NOTED OTHERWISE.
35. PIPING BETWEEN EACH PLUMBING FIXTURE AND THE NEAREST BRANCH OR MAIN PIPING RUN SHALL BE SIZED TO MATCH THE CORRESPONDING FIXTURE SCHEDULE CONNECTION SIZE AT A MINIMUM UNLESS NOTED AS A LARGER SIZE ON PLANS.
36. INSTALL ALL PIPING WITHOUT FORCING OR SPRINGING.
37. PROVIDE ALL PLUMBING FIXTURES AND EQUIPMENT WITH ACCESSIBLE STOPS.
38. PROVIDE FLEXIBLE CONNECTIONS IN ALL PIPING SYSTEMS CONNECTED TO PUMPS AND OTHER EQUIPMENT WHICH REQUIRE VIBRATION ISOLATION. FLEXIBLE CONNECTIONS SHALL BE PROVIDED AS CLOSE TO THE EQUIPMENT AS POSSIBLE OR AS INDICATED ON THE DRAWINGS.
39. VERIFY EXACT LOCATIONS OF ALL MECHANICAL, FIRE PROTECTION, ELECTRICAL AND/OR OTHER EQUIPMENT INSTALLED BY OTHERS REQUIRING PLUMBING CONNECTIONS PRIOR TO ORDERING OF MATERIALS OR INSTALLATION. COORDINATE EXACT ROUGH IN LOCATIONS AND REQUIREMENTS WITH OTHER INSTALLING CONTRACTORS AS APPLICABLE PRIOR TO INSTALLATION.
40. DOMESTIC WATER PIPING, FITTINGS, VALVES, AND APPURTENANCES SHALL BE LEAD-FREE IN COMPLIANCE WITH STATE REQUIREMENTS.
41. INSTALL ALL PLUMBING EQUIPMENT AND APPURTENANCES IN ACCORDANCE WITH MANUFACTURERS` RECOMMENDATIONS, CONTRACT DOCUMENTS, AND APPLICABLE CODES AND REGULATIONS.
42. ALL TESTS SHALL BE COMPLETED BEFORE ANY PIPING INSULATION IS APPLIED.
43. TEST SYSTEMS IN ACCORDANCE WITH REQUIREMENTS OF THE GOVERNING AUTHORITIES.
44. DISINFECTION AND FLUSHING OF POTABLE WATER PIPING SHALL BE DONE IN ACCORDANCE WITH THE PLUMBING CODE.
45. THE CONTRACTOR SHALL BE RESPONSIBLE FOR PATCHING AND REPAIRING ALL AREAS WHICH ARE EXCAVATED AND/OR DAMAGED BY THEIR OPERATIONS. THE CONTRACTOR SHALL RESTORE ALL AREAS DAMAGED BY THEIR OPERATIONS TO THEIR ORIGINAL CONDITION.

ABBREVIATIONS

(N)	NEW
(E)	EXISTING TO REMAIN
(D)	EXISTING TO BE REMOVED
(ER)	EXISTING TO BE RELOCATED
(RL)	NEW LOCATION OF RELOCATED ITEM
(F)	FUTURE
ABV	ABOVE
AD	ACCESS DOOR
ADA	AMERICANS WITH DISABILITIES ACT
AFF	ABOVE FINISHED FLOOR
AFG	ABOVE FINISHED GRADE
AP	ACCESS PANEL
ARCH	ARCHITECT
ASR	AUTO FIRE SPRINKLER RISER
BAS	BUILDING AUTOMATION SYSTEM
BEH	BEHIND
BFV	BUTTERFLY VALVE
BHP	BRAKE HORSEPOWER
BTU	BRITISH THERMAL UNIT
BV	BALL VALVE
BWV	BACKWATER VALVE
CA	COMPRESSED AIR
CD	CONDENSATE DRAIN
CR	STEAM CONDENSATE RETURN
CFF	CAP FOR FUTURE
CFH	CUBIC FEET PER HOUR
CFM	CUBIC FEET PER MINUTE
CFS	CUBIC FEET PER SECOND
CI	CAST IRON
CLG	CEILING
CO	CLEANOUT
CONC	CONCRETE
CV	CHECK VALVE
CW	DOMESTIC COLD WATER
CWFU	COLD WATER FIXTURE UNIT
DN	DOWN
DCVA	DOUBLE CHECK VALVE ASSEMBLY
DDCVA	DOUBLE DETECTOR CHECK VALVE ASSEMBLY
DFU	DRAINAGE FIXTURE UNIT
DIA	DIAMETER
DSN	DOWNSPOUT NOZZLE
DWG	DRAWING
DWV	DRAINAGE WASTE AND VENT
ELEC	ELECTRICAL
FA	FLOW ALARM
FC	FLEXIBLE CONNECTION
FCO	FLOOR CLEANOUT
FDV	FIRE DEPARTMENT VALVE
FDVC	FIRE DEPARTMENT VALVE CABINET
FFA/FFB	FROM FLOOR ABOVE/BELOW
FFE	FINISHED FLOOR ELEVATION
FH	FIRE HYDRANT
FHV	FIRE HOSE VALVE
FIN	FINISHED
FO	FUEL OIL
FPS	FEET PER SECOND
FT	FEET
FT	FLUSH TANK
FU	FIXTURE UNIT
FV	FLUSH VALVE
G	GAS
GAL	GALLONS
GC	GAS COCK
GPH	GALLONS PER HOUR
GPM	GALLONS PER MINUTE
GV	GATE VALVE
HD	HUB DRAIN
HP	HORSEPOWER
HW	DOMESTIC HOT WATER
HWR	DOMESTIC HOT WATER RECIRCULATION
HWFU	HOT WATER FIXTURE UNIT
IE	INVERT ELEVATION
LAV	LAVATORY
LBS	POUNDS (UNIT OF FORCE)
MAX	MAXIMUM
MBH	THOUSANDS BTU/HR
MECH	MECHANICAL
MFR	MANUFACTURER
MIN	MINIMUM
NC	NORMALLY CLOSED
NFPA	NATIONAL FIRE PROTECTION ASSOCIATION
NO	NORMALLY OPEN OR NUMBER
NIC	NOT IN CONTRACT
OFCI	OWNER FURNISHED CONTRACTOR INSTALLED
OW	OIL WASTE
POC	POINT OF CONNECTION
POD	POINT OF DISCONNECTION
PRV	PRESSURE REDUCING VALVE
PS	PRESSURE SWITCH
PSI	POUNDS PER SQUARE INCH
RI&C	ROUGH IN AND CONNECT
R	RISE, RISER
RP	REDUCED-PRESSURE PRINCIPLE BACKFLOW PREVENTION ASSEMBLY
RPM	REVOLUTIONS PER MINUTE
SD	STORM DRAIN
SF	SQUARE FEET
SOV	SHUT-OFF VALVE
SPK	SPRINKLER
SS	SANITARY SEWER
TFA/TFB	TO FLOOR ABOVE/BELOW
TP	TRAP PRIMER
TS	TAMPER SWITCH
TT	TEST TEE
TYP	TYPICAL
U/UR	URINAL
VB	VACUUM BREAKER
V	VENT
VTR	VENT THROUGH ROOF
W	WASTE
WC	WATER CLOSET
WHA	WATER HAMMER ARRESTOR
WCO	WALL CLEANOUT
W/	WITH

PLUMBING LEGEND

NOTE: NOT ALL SYMBOLS OR ABBREVIATIONS ARE APPLICABLE TO THIS PROJECT. REFER TO DETAILS AND NOTES FOR MOUNTING HEIGHTS.

SYMBOL	DESCRIPTION
	TRAP PRIMER
	BALL VALVE
	BUTTERFLY VALVE
	GATE VALVE
	BALANCING VALVE
	SHUT OFF VALVE IN CONCRETE YARD BOX
	ANGLE GATE VALVE
	SOLENOID VALVE
	CHECK VALVE
	PRESSURE REDUCING VALVE
	MIXING VALVE
	ELECTRONIC MIXING VALVE
	SEISMIC VALVE
	PLUG VALVE / GAS COCK
	RELIEF VALVE
	VACUUM RELIEF VALVE
	PRESSURE & TEMPERATURE RELIEF VALVE
	AUTOMATIC AIR VENT
	BACKWATER VALVE
	REDUCED - PRESSURE BACKFLOW PREVENTION ASSEMBLY (RP)
	UNION
	STRAINER
	STRAINER WITH BLOW OFF HOSE BIBB
	PIPE ANCHOR
	PIPE ALIGNMENT GUIDE
	EXPANSION JOINT
	FLEXIBLE CONNECTOR
	CAP OR PLUG
	BLIND FLANGE
	CONCENTRIC REDUCER
	AQUASTAT
WHA	WATER HAMMER ARRESTOR
PG	PRESSURE GAUGE WITH COCK
T	THERMOMETER
CO/WCO	CLEANOUT / WALL CLEANOUT
FCO/COTG	FLOOR CLEANOUT / CLEANOUT TO GRADE
YCO/COTG	YARD CLEANOUT / CLEANOUT TO GRADE
TT	TEST TEE
WH	WALL HYDRANT
HB	HOSE BIBB
	ROOF HYDRANT
YH	YARD HYDRANT
	THRUST BLOCK
FD	FLOOR DRAIN
FS	FLOOR SINK W/ GRATE AS SHOWN
	HUB DRAIN
	ROOF RECEPTOR
	STORM DRAIN
	OVERFLOW DRAIN
	DOWN SPOUT NOZZLE
M	SUB-METER

SYMBOL	DESCRIPTION
1% SLOPE	DIRECTION OF SLOPE
	DIRECTION OF FLOW
	PIPE UP OR UP & DN
	PIPE DOWN
	PIPE DROP
	TOP CONNECTION - BRANCH LINE
	BOTTOM CONNECTION - BRANCH LINE
	COLD WATER
FW	FLUSH WATER
	HOT WATER
	HOT WATER RECIRCULATION
140	HOT WATER (140°F)
	VENT
	PIPING BELOW GRADE OR FLOOR
	PIPING ABOVE GRADE OR FLOOR
SS	SANITARY SEWER, WASTE OR SOIL
SD	STORM DRAIN, RAINWATER DRAIN PIPING
OD	OVERFLOW STORM DRAIN PIPING
PD	PUMPED DISCHARGE
PS	PUMPED STORM
D	DRAIN LINE
IW	INDIRECT WASTE
GW	GREASE WASTE
GRW	GREY WATER WASTE
G	NATURAL GAS (7"W.C.)
MG	MEDIUM PRESSURE GAS (2 PSIG TO 5 PSIG)
LG	LOW PRESSURE GAS
CA	COMPRESSED AIR
TW	TEMPERED WATER
TWR	TEMPERED WATER RETURN
6"	PIPE SIZE (DIAMETER IN INCHES)

GENERAL SYMBOLS

SYMBOL	DESCRIPTION
(E)	EXISTING WORK TO REMAIN
(D)	EXISTING TO BE REMOVED
(ER)	EXISTING TO BE RELOCATED
(RL)	NEW LOCATION OF RELOCATED ITEM
(F)	FUTURE
	CENTER LINE
	POINT OF CONNECTION OR POINT OF DISCONNECTION
SS V	SANITARY SEWER / VENT STACK
CW HW HWC	COLD WATER / HOT WATER / HOT WATER RECIRCULATION RISER
SD OD	STORM DRAIN / OVERFLOW DRAIN RISER
G	GAS RISER
XX X	PLUMBING EQUIPMENT
#	KEYED NOTE
1 P2	DETAIL NO. SHEET NO.
#	POUNDS OR NUMBER
A P-1	SECTION A, DRAWING P-1
XXX	EQUIPMENT BY OTHERS (KITCHEN)

PLUMBING DRAWING LIST

SHEET NUMBER	SHEET NAME	50% CD	90% CD	100% CD
P000	PLUMBING LEGEND AND ABBREVIATIONS	X	X	X
P002	BASIS OF DESIGN AND SCHEDULES	X	X	X
P140	LEVEL 4 - OVERALL DEMO PLAN - PLUMBING	X	X	X
P230	LEVEL 3 - OVERALL FLOOR PLAN - PLUMBING	X	X	X
P240	LEVEL 4 - OVERALL FLOOR PLAN - PLUMBING	X	X	X
P241	LEVEL 4 - NORTH FLOOR PLAN - PLUMBING	X	X	X
P242	LEVEL 4 - SOUTH FLOOR PLAN - PLUMBING	X	X	X
Grand total: 7				

DEFERRED SUBMITTALS

1. FIRE SPRINKLER DESIGN
2. SEISMIC BRACING FOR MECHANICAL AND PLUMBING SYSTEMS, INCLUDING EQUIPMENT, PIPING, AND DUCTWORK.
3. PIPE SYSTEM CERTIFICATION AND ANALYSIS:
   - A. DESIGN: DESIGN AND CALCULATE REQUIREMENTS FOR THERMAL EXPANSION OF PIPING SYSTEMS AND FOR SELECTING AND DESIGNING EXPANSION JOINTS AND LOOPS.
   - B. ANCHOR DETAILS: DETAIL FABRICATION OF EACH ANCHOR. SHOW DIMENSIONS AND METHODS OF ASSEMBLY AND ATTACHMENT TO BUILDING STRUCTURE. SUPPORTS, ANCHORS, AND GUIDES SHALL BE DESIGNED FOR COMBINED GRAVITY, SEISMIC, PRESSURE, AND THERMAL LOADS.
   - C. ALIGNMENTS GUIDE DETAILS: DETAIL FIELD ASSEMBLY AND ATTACHMENT TO BUILDING STRUCTURE.
   - D. SCHEDULE: EACH EXPANSION JOINT SHALL BE SCHEDULE WITH MANUFACTURER, TYPE, MATERIAL, SIZE, PRESSURE RATING, END CONNECTIONS, AND LOCATION.
   - E. FULLY COORDINATE WITH DESIGN OF SEISMIC RESTRAINT AND ANCHORAGE.

*FOR ALL ITEMS LISTED ABOVE, THE PLUMBING AND/OR MECHANICAL CONTRACTOR SHALL PROVIDE A DELEGATED DESIGN SUBMITTAL WITH DOCUMENTATION AND ENGINEERING REQUIRED TO SATISFY REQUIREMENTS OF THE AUTHORITY HAVING JURISDICTION (AHJ). THE DELEGATED DESIGN SUBMITTAL SHALL INCLUDE BUT NOT BE LIMITED TO ANALYSIS DATA SIGNED AND SEALED BY A QUALIFIED PROFESSIONAL ENGINEER RESPONSIBLE FOR THEIR PREPARATION.

Portland State UNIVERSITY

PSU CAPITAL PROJECTS & CONSTRUCTION

RMNC

RICHARD & MAURINE NEUBERGER CENTER

4TH FLOOR SPHR INTERIOR REMODEL

PSU CAMPUS | BLOCK: 087
1600 SW 4TH AVENUE
PORTLAND, OREGON 97201

GLUMAC
A TETRA TECH COMPANY
900 SW Fifth Ave., Suite 1600
Portland, OR 97204
www.glumac.com
T. 503.227.5280
Project Manager: P. Hallowell
Job. No.: 150-26US00253

REGISTERED PROFESSIONAL ENGINEER 089532PE OREGON MAY 14, 2013 DARREN J. PHILLIPS EXPIRES: 12/31/26

ISSUED FOR BID & PERMIT

9/4/2026

Sheet Title :

PLUMBING LEGEND AND ABBREVIATIONS

Revisions :

Date :

Drawn : DP

Checked : DP

Sheet # :

P000

PLUMBING/ FP BASIS OF DESIGN

A. THIS PROJECT INCLUDES A FOURTH FLOOR, ~13,200 SF TI FOR THE PSU SPEECH AND HEARING DEPARTMENT. EXISTING PLUMBING UTILITIES WASTE AND VENT STACKS AND COLD/ HOT WATER RISERS ARE PROVIDED AT BOTH THE NORTH AND SOUTH RESTROOM CORE WITH CFF CONNECTIONS AVAILABLE FOR USE.

B. DUCTWORK INSULATION FROM THE EXISTING ORIGINAL BUILDING SYSTEMS WAS TESTED AND CONFIRMED FOR ASBESTOS. THE PLUMBING INSULATION HAS NOT BEEN TESTED FOR ASBESTOS, TESTING SHALL BE MADE BEFORE ANY CONNECTIONS TO PIPING WITH INSULATION FROM THE ORIGINAL BUILDING PLUMBING.

C. THE DESIGN INCLUDES THE FOLLOWING NOTABLE FEATURES, BUT IS NOT LIMITED TO THIS SCOPE. CONTRACTOR IS RESPONSIBLE FOR REVIEWING ALL CONTRACT DOCUMENTS AND COORDINATING WITH ALL DISCIPLINES.
   1. CONNECTION TO EXISTING CORE UTILITIES TO INCLUDE (E) CFF TENANT UTILITY STUBS AND (E) CORE PIPING.
   2. PROVIDE ASTM E84 SOUND SEAL WRAP ON ALL NEW SANITARY DRAINAGE PIPING WITHIN THE CEILING OF LEVEL 3 AND ALL NEW AND EXISTING PIPING SANITARY PIPING WITHIN THE CEILING OF LEVEL 4.

D. CODES AND STANDARDS (LATEST EDITIONS UNLESS OTHERWISE REQUIRED BY AHJ)
   A. AMERICANS WITH DISABILITIES ACT (ADA)
   B. OREGON BUILDING CODES ENFORCED BY THE AUTHORITY HAVING JURISDICTION (AHJ):
      a. 2025 OREGON MECHANICAL SPECIALTY CODE (OMSC) BASED ON THE 2024 INTERNATIONAL MECHANICAL CODE (IMC) AND THE 2024 INTERNATIONAL FUEL GAS CODE (IFGC) WITH STATE AMENDMENTS.
      b. 2025 OREGON STRUCTURAL SPECIALTY CODE (OSSC) BASED ON THE 2024 INTERNATIONAL BUILDING CODE (IBC).
      c. 2023 OREGON PLUMBING SPECIALTY CODE (OPSC) BASED ON THE 2021 UNIFORM PLUMBING CODE (UPC).
      d. 2023 OREGON ELECTRICAL SPECIALTY CODE (BASED ON THE 2023 NATIONAL ELECTRICAL CODE (NEC) WITH STATE AMENDMENTS.
      e. 2025 OREGON ENERGY EFFICIENCY SPECIALTY CODE (OEESC) BASED ON THE ASHRAE STANDARD 90.1-2012.
      f. 2019 OREGON ZERO ENERGY READY COMMERCIAL CODE (OZEERCO) BASED ON ASHRAE 90.1-2016.
   C. PSU CAPITAL PROJECTS & CONSTRUCTION TECHNICAL DESIGN STANDARDS REVISION 6, JULY 2025.

E. WATER SUPPLY:
   1. WATER PIPE SIZE: COLD AND HOT WATER CONNECT TO EXISTING NORTH AND SOUTH CORE RISERS.
   2. CONNECTED LOAD: REFER TO T.I. FIXTURE CALCULATION ON THIS PAGE.

F. DOMESTIC HOT WATER:
   1. POINT-OF-USE LAVATORY AND HAND WASHING MIXING VALVES: 110° F
   2. RECIRCULATION:
      - HOT WATER TO T.I. FIXTURES IS NOT RECIRCULATED.

G. SANITARY SEWER & VENT:
   1. CONNECTIONS TO EXISTING CORE 4" SS CFF & 2" V CFF CONNECTIONS

H. STORM DRAIN:
   1. STORM DRAINAGE IS NOT ALTERED UNDER THIS SCOPE OF WORK.

I. SEISMIC:
   1. ANCHORAGE AND RESTRAINTS MUST BE COORDINATED WITH STRUCTURAL ENGINEER AND AUTHORITY HAVING JURISDICTION.

J. FIRE PROTECTION:
   1. IN GENERAL, FOURTH FLOOR FIRE SPRINKLER SYSTEM INCLUDING ALL FIRE EQUIPMENT, DEVICES, PIPING, SUPPORTS, AND OTHER APPURTENANCES ARE TO BE DEMOLISHED BACK TO THE FLOOR CONTROL VALVE FOR NEW TENANT BUILD OUT.
   2. REFER TO DIVISION 21 FIRE PROTECTION PERFORMANCE SPECIFICATIONS.
   3. PROVIDE FIRE WATCH DURING DEMOLITION/ WHILE FIRE SPRINKLER SYSTEM IS INACTIVE.

PLUMBING FIXTURE SCHEDULE

TAG	FIXTURE	MANUFACTURER	MODEL	ADA (Y/N)	FLOW (GPF/GPM)	CONNECTION SIZE W	CONNECTION SIZE V	CONNECTION SIZE HW	CONNECTION SIZE CW	ELECTRICAL V	ELECTRICAL PH	ELECTRICAL A	REMARKS
IH-1	INSTAHOT	IN SINK ERATOR - ISE	HWT-00		0.75				1/4"	115	1	6.5	WITH ISE HOT/ COLD FAUCET FHC3010 AND F-3000 FILTER. COORDINATE WALL RECEPTICAL WITH DIV 26.
L-1	LAVATORY (WALL HUNG)	AMERICAN STANDARD	0355.012 "LUCERNE"	YES	0.5	2"	1 1/2"	1/2"	1/2"				FAUCET: CHICAGO 802-E70-317XKABCP CARRIER: JR SMITH 0700 PROVIDE WITH GRID STRAINER AND MX-1
MS-1	MOP SINK	KOHLER	K-6710	-	2	3"	2"	3/4"	3/4"				SINK: CAST IRON FLOOR MOUNT CORNER BASIN FAUCET: CHICAGO 897-RCF WITH VACUUM BREAKER PROVIDE WITH ADJACENT HOSE BIBB FOR CHEMICAL DISPENSER: CHICAGO FAUCET 293-369COLDCP
S-1	DOUBLE BOWL SINK (33" X 22" x 6")	ELKAY	ECTSRAD332260 "CROSSTOWN"	YES	1.5	2"	2"	1/2"	1/2"				SINK: DROP-IN, SINGLE-HOLE, 18GA FAUCET W/ PULL DOWN SPOUT: CHICAGO 434-ABCP PROVIDE WITH: GRID STRAINER
S-2	SINGLE BOWL SINK (22" X 22" x 6")	ELKAY	ECTSRAD25226TBG "CROSSTOWN"	YES	1	2"	2"	1/2"	1/2"				SINK: DROP-IN, 3-HOLE 18GA FAUCET: CHICAGO 786-GN8AE36ABCP, WRIST BLADE HANDLES, GOOSENECK, WITH CHICAGO E73JKABGP 1.0-GPM FLOW INSERT. PROVIDE WITH: GRID STRAINER
S-3	SINGLE BOWL SINK (33" X 22" x 6")	ELKAY	ECTSRSAD332260 "CROSSTOWN"	YES	1	2"	2"	1/2"	1/2"				SINK: DROP-IN, 3-HOLE 18GA FAUCET: CHICAGO 786-GN8AE36ABCP, WRIST BLADE HANDLES, GOOSENECK, WITH CHICAGO E73JKABGP 1.0-GPM FLOW INSERT. PROVIDE WITH: GRID STRAINER
TP-1	TRAP PRIMER	PPP	PR-500						1/2"				PRESSURE ACTIVATED TRAP PRIMER, 3 PSI ACTIVATION. PROVIDE WITH DU-U UNIT.
WC-1	WATER CLOSET (WALL HUNG)	KOHLER	KINGSTON K-84325	YES	1.35	4"	2"		1 1/4"				DUAL FLUSH VALVE: SLOAN WES 111-1.6/1.1-CP. CARRIER: JR SMITH 0210, 0240, OR 0410 AS APPLICABLE SEAT: BEMIS 1655SSCT MOUNTING HEIGHT: 17" TO RIM
DRAINS													
FD-1	FLOOR DRAIN - FINISHED	JR SMITH	2005-A-02			2"							ENAMEL COATED CAST IRON BODY WITH FLANGE, INTEGRAL REVERSIBLE CLAMPING COLLAR, SEEPAGE OPENINGS, ADJUSTABLE ROUND SATIN NICKEL BRONZE STRAINER, SEDIMENT BUCKET, BOTTOM OUTLET, CAULK INSIDE OR TY SEAL OR NO-HUB JOINT. PROVIDE TRAP PRIMER. COORDINATE DRAIN LOCATION AND SLAB PENETRETION LOCATION WITH ARCHITECTURAL AND STRUCTURAL.

NOTES:

A. COMPLY WITH ALL MANUFACTURER INSTALLATION REQUIRMENTS TO PROVIDE COMPLETE AND OPERATIONAL FIXTURES.
B. PROVIDE TRANSITION FITTING AS REQUIRED TO CONNECT TO BRANCH PIPING, WHICH MAY BE A DIFFERENT SIZE, AND AS SHOWN ON DRAWINGS.
C. PROVIDE STOP VALVES, BACKFLOW PREVENTERS AND SUPPORTS AS REQUIRED BY THE MANUFACTURER AND PLUMBING CODE.
D. COORDINATE WITH ELECTRICAL DESIGN FOR POWER SUPPLY AND LOCATIONS.
E. HOT WATER SHALL BE LIMITED TO ALL FIXTURES IN ACCORDANCE WITH ASSE STANDARDS: PUBLIC LAVATORIES SHALL BE LIMITED TO 110 F (ASSE 1070).

MIXING VALVE SCHEDULE

TAG	MANUFACTURER	MODEL	SYSTEM SERVED	LOCATION	FLOW RATE MIN (GPM)	FLOW RATE MAX (GPM)	MAX PRESSURE DROP (PSI)	CONNECTION INLET (IN)	CONNECTION OUTLET (IN)	OUTLET SETPOINT (°F)	MOUNTING (CABINET/EXPOSED)	UNIT SIZE (L"xW"xH")	NOTES
MX-1	LEONARD	LF-170	LAVS	VARIES	0.25	1.7	5	1/2"	1/2"	110	EXPOSED	4"X2.5"X5"	1-3

NOTES
1. LOW LEAD CONTAINING LESS THAN 0.25% LEAD BY WEIGHT.
2. SELF REGULATING THERMOSTATIC MIXING VALVE WITH 5 DEGREE APPROACH TEMPERATURE..
3. VALVE ASSEMBLY TO BE ASSE 1070 CERTIFIED.

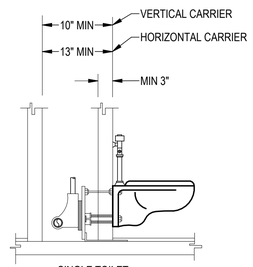

SINGLE TOILET

NOTES:
1. PIPE CHASE CLEARANCES FOR WALL HUNG CARRIER TOILETS.
2. REFER TO PLANS FOR SIZES AND CONTINUATION.

2 PIPE CHASE WALL HUNG CLOSETS

SCALE: NONE

T.I. WASTE AND WATER CALCULATION

FIXTURE TYPE	FIXTURES REMOVED/ DEMOLISHED NO.	WASTE FU	WASTE TOTAL	COLD WATER FU	COLD WATER TOTAL	HOT WATER FU	HOT WATER TOTAL	TOTAL WATER FU	FIXTURES NEW NO.	WASTE FU	WASTE TOTAL	COLD WATER FU	COLD WATER TOTAL	HOT WATER FU	HOT WATER TOTAL	TOTAL WATER FU
DISHWASHER (DOMESTIC)	1	1	0	0	0	1.5	1.5	1.5	0	0	0	0	0	1.5	0	0
SINK (GENERAL)	1	2	2	1.125	1.125	1.125	1.125	1.5	4	2	8	1.125	4.5	1.125	4.5	6
LAVATORY, SINGLE	0	1	0	0.75	0	0.75	0	0	2	1	2	0.75	1.5	0.75	1.5	2
WATER CLOSET, FV, PUBLIC	0	4	0	5	0	0	0	0	2	4	8	5	10	0	0	10
OTHER	0	0	0	0	0	0	0	0	0	0	0	0	0	0	0	0
TOTAL FU			2.0		1.1		2.6	3.0			18.0		16.0		6.0	18.0

PLUMBING PIPE MATERIALS SCHEDULE

TAG	SERVICE/ SYSTEM	MATERIAL/ JOINTS
CW	DOMESTIC COLD WATER	TYPE L COPPER, SOLDERED JOINTS
HW	DOMESTIC HOT WATER	TYPE L COPPER, SOLDERED JOINTS
SS	SANITARY SEWER	CAST IRON, NO HUB
V	VENT	CAST IRON, NO HUB

NOTES:
REFER TO SPECIFICATIONS SECTION 221000 FOR COMPLETE LISTINGS.

Portland State UNIVERSITY

PSU CAPITAL PROJECTS & CONSTRUCTION

RMNC

RICHARD & MAURINE NEUBERGER CENTER

4TH FLOOR SPHR INTERIOR REMODEL

PSU CAMPUS | BLOCK: 087
1600 SW 4TH AVENUE
PORTLAND, OREGON 97201

GLUMAC
A TETRA TECH COMPANY
900 SW Fifth Ave., Suite 1600
Portland, OR 97204
www.glumac.com
T. 503.227.5280
Project Manager: P. Hallowell
Job. No.: 150-26US00253

REGISTERED PROFESSIONAL ENGINEER
089592PE
OREGON
MAY 14, 2021
DARREN J. PHILLIPS
EXPIRES: 12/31/26

ISSUED FOR BID & PERMIT

9/4/2026

Sheet Title :
BASIS OF DESIGN AND SCHEDULES

Revisions : | Date :

Drawn : DP | Checked : DP

Sheet # :

P002

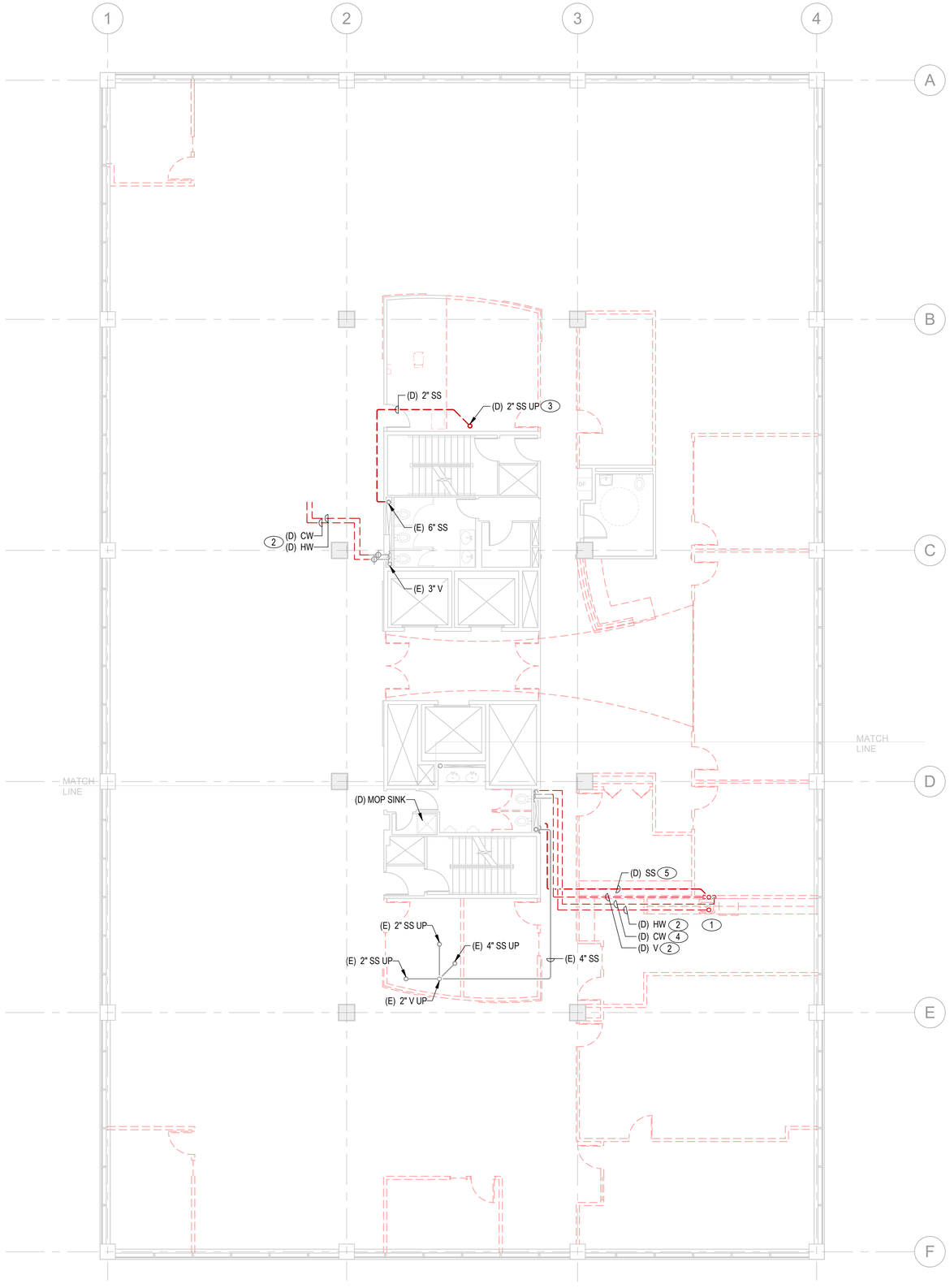

1 LEVEL 4 - OVERALL DEMO PLAN - PLUMBING

SCALE: 1/8" = 1'-0"

1/8" = 1'-0"

0 8' - 0" 16' - 0" 24' - 0" 32' - 0"

SHEET NOTES

A. REFER TO ARCHITECTURAL ROOM DATA SHEETS AND DEMO SHEETS FOR ADDITIONAL DEMO SCOPE AND REQUIREMENTS.
B. CONTACT OWNER AFTER CEILING IS REMOVED FOR INSPECTION.

KEYED NOTES (#)

1 DEMOLISH ALL FIXTURES AND APPURTENANCES WITHIN ROOM. REMOVE ALL SUPPLY AND VENT PIPING AS INDICATED AND CAP. DEMO DWV PIPING ON LEVEL BELOW BACK TO CORE CFF CONNECTION.

2 DEMOLISH EXISTING PIPING, CAP ENDS FOR FUTURE CONNECTION.

3 DEMOLISH EXISTING ABS DWV PIPING SERVING FIXTURE ABOVE. COORDINATE DEMO SCOPE WITH WITH 5TH FLOOR TENANT FOR FIXTURE SHUTDOWN.

4 DEMOLISH EXISTING CW PIPING BACK TO MAIN RISER, CAP END FOR FUTURE.

5 ROUTING OCCURS WITHIN CEILING ON LEVEL BELOW.

Portland State UNIVERSITY

PSU CAPITAL PROJECTS & CONSTRUCTION

RMNC

RICHARD & MAURINE NEUBERGER CENTER

4TH FLOOR SPHR INTERIOR REMODEL

PSU CAMPUS | BLOCK: 087
1600 SW 4TH AVENUE
PORTLAND, OREGON 97201

GLUMAC
A TETRA TECH COMPANY
900 SW Fifth Ave., Suite 1600
Portland, OR 97204
www.glumac.com
T. 503.227.5280
Project Manager: P. Hallowell
Job. No.: 150-26US00253

REGISTERED PROFESSIONAL ENGINEER
089592PE
OREGON
MAY 14, 2021
DARREN J. PHILLIPS
EXPIRES: 12/31/26

ISSUED FOR BID & PERMIT

9/4/2026

Sheet Title :
LEVEL 4 - OVERALL DEMO PLAN - PLUMBING

Revisions : | Date :

Drawn : DP | Checked : DP

Sheet # :
P140

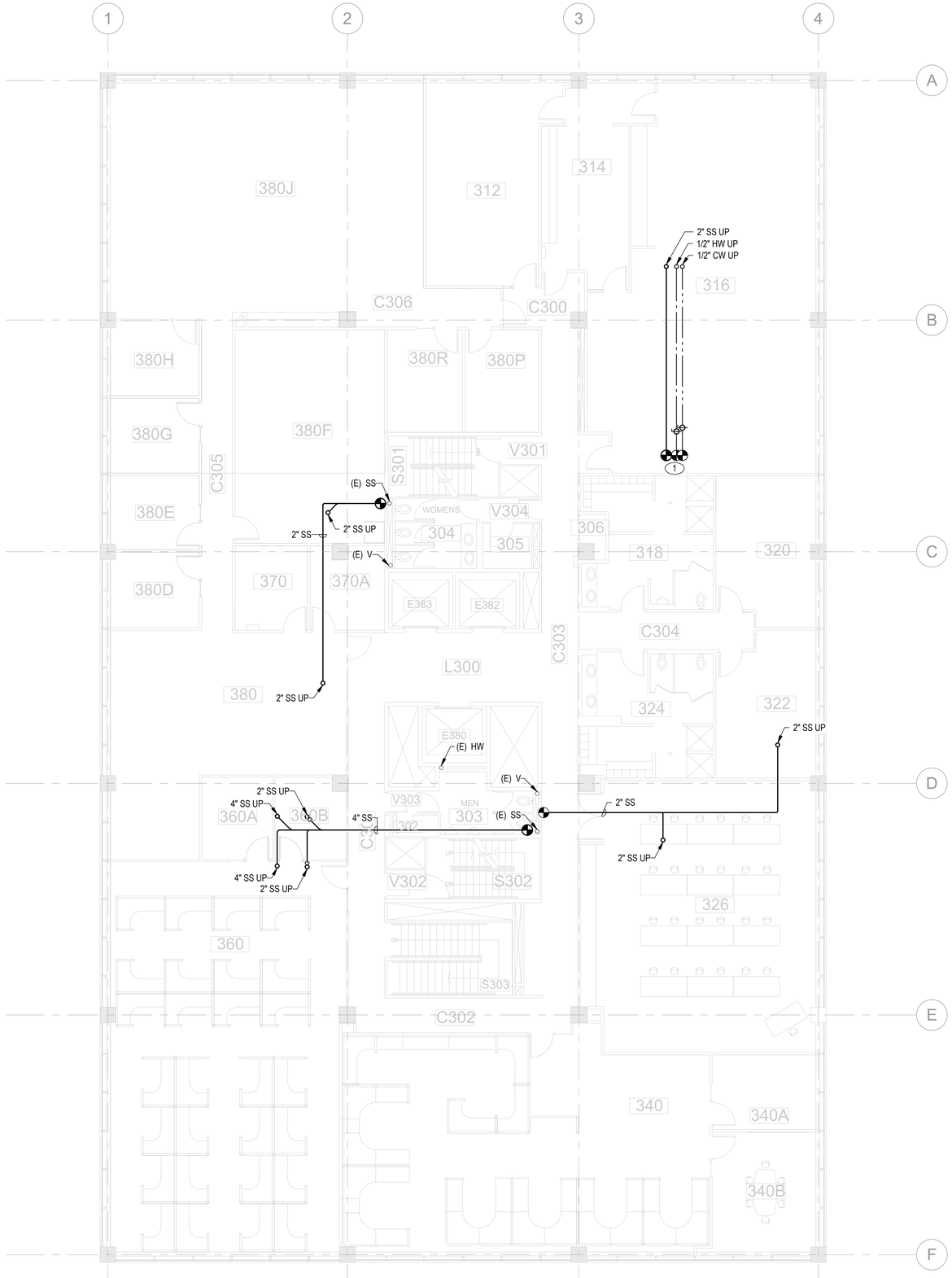

KEYED NOTES (#)

1 POC TO EXISTING WATER AND WASTE SERVING (E) RESTROOM ABOVE ON LEVEL 4.

1 LEVEL 3 - OVERALL FLOOR PLAN - PLUMBING
SCALE: 1/8" = 1'-0"

1/8" = 1'-0"
0 8' - 0" 16' - 0" 24' - 0" 32' - 0"

Portland State UNIVERSITY
PSU CAPITAL PROJECTS & CONSTRUCTION

RMNC
RICHARD & MAURINE NEUBERGER CENTER

4TH FLOOR SPHR INTERIOR REMODEL

PSU CAMPUS | BLOCK: 087
1600 SW 4TH AVENUE
PORTLAND, OREGON 97201

GLUMAC
A TETRA TECH COMPANY
900 SW Fifth Ave., Suite 1600
Portland, OR 97204
www.glumac.com
T. 503.227.5280
Project Manager: P. Hallowell
Job. No.: 150-26US00253

REGISTERED PROFESSIONAL ENGINEER
089592PE
OREGON
MAY 14, 2021
DARREN J. PHILLIPS
EXPIRES: 12/31/26

ISSUED FOR BID & PERMIT

9/4/2026

Sheet Title :
LEVEL 3 - OVERALL FLOOR PLAN - PLUMBING

Revisions : | Date :

Drawn : DP | Checked : DP

Sheet # :
P230

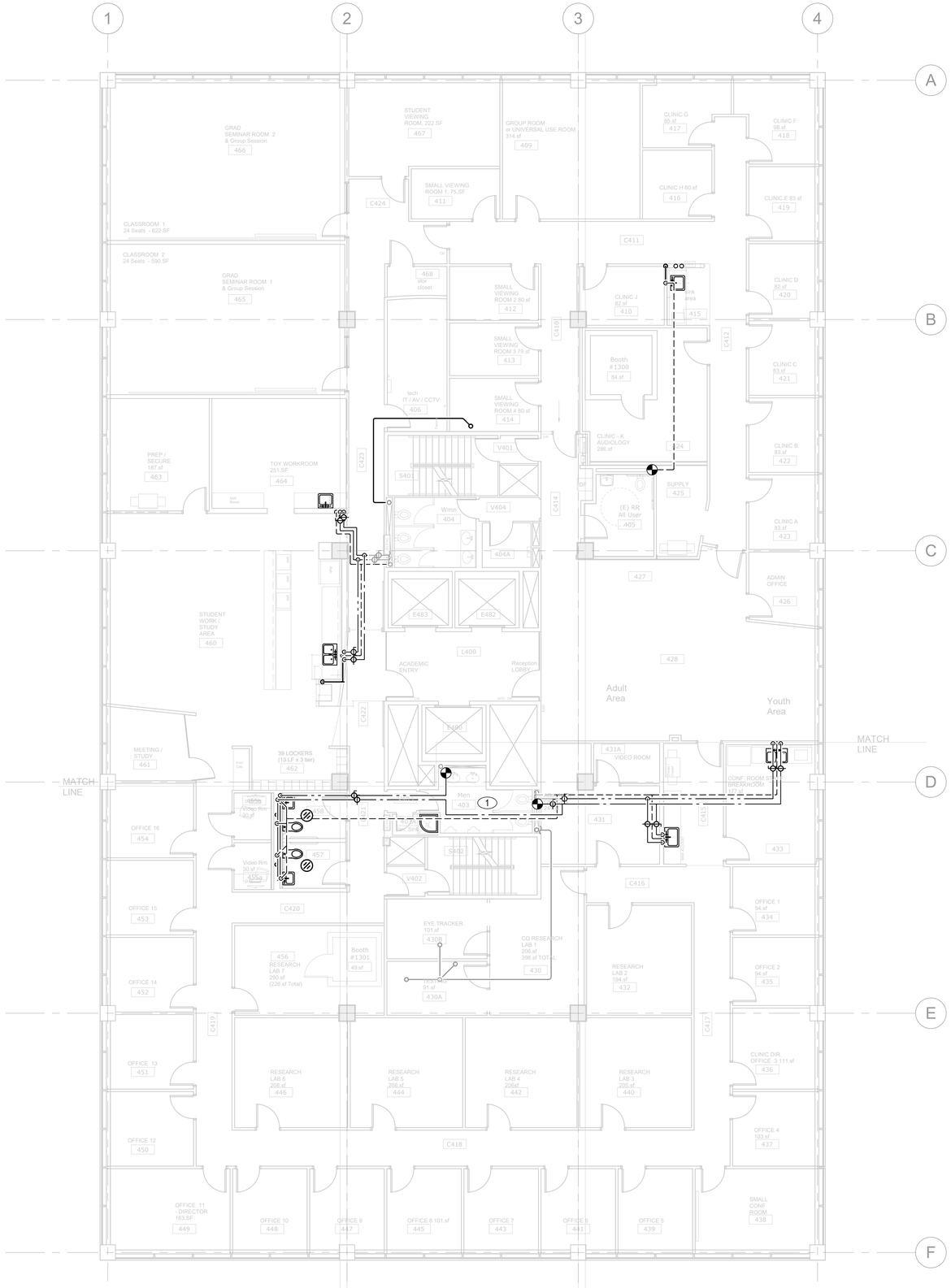

SHEET NOTES

A. REFER TO SECTOR PLANS FOR ADDITIONAL INFORMATION.

KEYED NOTES (#)

1 CORE RESTROOM CEILING TO BE DEMOLISHED, COORDINATE PIPE ROUTING WITH MECHANICAL DUCTWORK.

1 **LEVEL 4 - OVERALL FLOOR PLAN - PLUMBING**
SCALE: 1/8" = 1'-0"

1/8" = 1'-0"
0 8' - 0" 16' - 0" 24' - 0" 32' - 0"

Portland State UNIVERSITY
PSU CAPITAL PROJECTS & CONSTRUCTION

RMNC
RICHARD & MAURINE NEUBERGER CENTER

4TH FLOOR SPHR INTERIOR REMODEL

PSU CAMPUS | BLOCK: 087
1600 SW 4TH AVENUE
PORTLAND, OREGON 97201

GLUMAC
A TETRA TECH COMPANY
900 SW Fifth Ave., Suite 1600
Portland, OR 97204
www.glumac.com
T. 503.227.5280
Project Manager: P. Hallowell
Job. No.: 150-26US00253

REGISTERED PROFESSIONAL ENGINEER
089592PE
OREGON
MAY 14, 2014
DARREN J. PHILLIPS
EXPIRES: 12/31/26

ISSUED FOR BID & PERMIT

9/4/2026

Sheet Title :
LEVEL 4 - OVERALL FLOOR PLAN - PLUMBING

Revisions : | Date :

Drawn : DP | Checked : DP

Sheet # :
P240

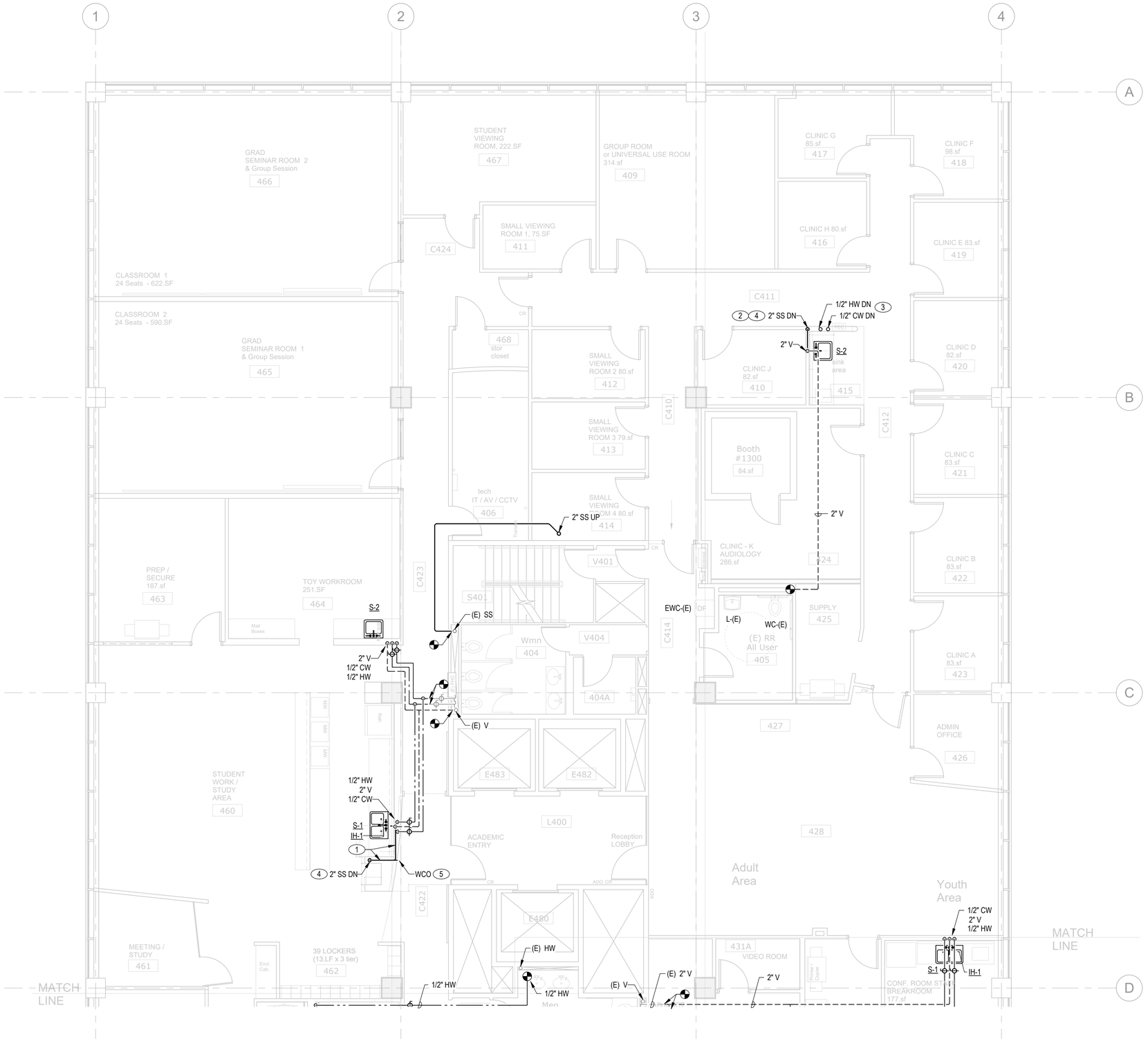

KEYED NOTES

1. FIXTURE WASTE ROUTES WITHIN WALL TO AVOID PENETRATION THRU BEAM BELOW.
2. FIXTURE WASTE ROUTES WITHIN WALL TO AVOID PENETRATION THRU WAFFLE SLAB BEAM BELOW.
3. COORDINATE VERTICAL PIPE PENETRATION LOCATIONS AND SPACING THROUGH CONCRETE SLAB WITH STRUCTURAL.
4. COORDINATE VERTICAL PIPE PENETRATION LOCATION THROUGH CONCRETE SLAB WITH STRUCTURAL.
5. PROVIDE ACCESS PANEL (AP) FOR WALL CLEANOUT, COORDINATE CLEANOUT AND AP WITH ARCHITECTURAL FEATURE WALL.

1 LEVEL 4 - NORTH FLOOR PLAN - PLUMBING
SCALE: 3/16" = 1'-0"

3/16" = 1'-0"
0 5' - 4" 10' - 8" 16' - 0" 21' - 4"

Portland State UNIVERSITY
PSU CAPITAL PROJECTS & CONSTRUCTION

RMNC
RICHARD & MAURINE NEUBERGER CENTER

4TH FLOOR SPHR INTERIOR REMODEL

PSU CAMPUS | BLOCK: 087
1600 SW 4TH AVENUE
PORTLAND, OREGON 97201

GLUMAC
A TETRA TECH COMPANY
900 SW Fifth Ave., Suite 1600
Portland, OR 97204
www.glumac.com
T. 503.227.5280
Project Manager: P. Hallowell
Job. No.: 150-26US00253

REGISTERED PROFESSIONAL ENGINEER
089592PE
OREGON
MAY 14, 2014
DARREN J. PHILLIPS
EXPIRES: 12/31/26

ISSUED FOR BID & PERMIT

9/4/2026

Sheet Title :
LEVEL 4 - NORTH FLOOR PLAN - PLUMBING

Revisions : | Date :

Drawn : DP | Checked : DP

Sheet # :
P241

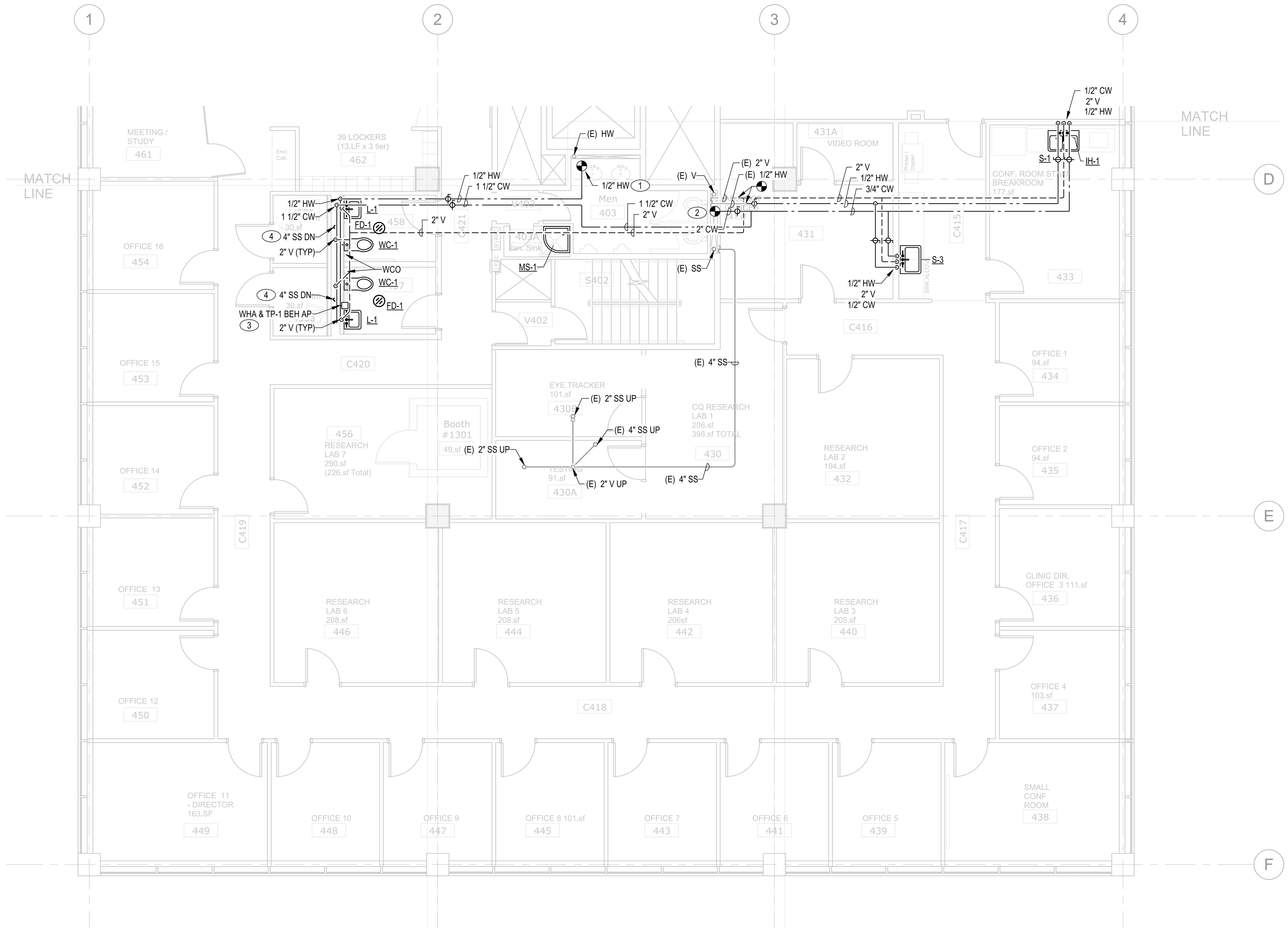

1 LEVEL 4 - SOUTH FLOOR PLAN - PLUMBING

SCALE: 3/16" = 1'-0"

KEYED NOTES (#)

1 CONNECT 1/2" HW TO (E) HW RISER. EXISTING HOT WATER RISER INSULATION HAS NOT BEEN TESTED FOR ASBESTOS. TESTING IS REQUIRED BEFORE ANY MODIFICATIONS MADE TO BUILDINGS' ORIGINAL CORE SYSTEMS.

2 CONNECT 2" CW TO (E) CW RISER. EXISTING COLD WATER RISER INSULATION HAS NOT BEEN TESTED FOR ASBESTOS. TESTING IS REQUIRED BEFORE ANY MODIFICATIONS MADE TO BUILDINGS' ORIGINAL CORE SYSTEMS.

3 HAMMER ARRESTER SHALL BE INSTALLED WITH BALL VALVE FOR MAINTENANCE PURPOSES.

4 COORDINATE VERTICAL PIPE PENETRATION LOCATION THROUGH CONCRETE SLAB WITH STRUCTURAL.

3/16" = 1'-0"

0 5' - 4" 10' - 8" 16' - 0" 21' - 4"

Portland State UNIVERSITY

PSU CAPITAL PROJECTS & CONSTRUCTION

RMNC

RICHARD & MAURINE
NEUBERGER CENTER

4TH FLOOR SPHR
INTERIOR REMODEL

PSU CAMPUS | BLOCK: 087
1600 SW 4TH AVENUE
PORTLAND, OREGON 97201

GLUMAC
A TETRA TECH COMPANY
900 SW Fifth Ave., Suite 1600
Portland, OR 97204
www.glumac.com
T. 503.227.5280
Project Manager: P. Hallowell
Job. No.: 150-26US00253

REGISTERED PROFESSIONAL ENGINEER
089592PE
OREGON
MAY 14, 2024
DARREN J. PHILLIPS
EXPIRES: 12/31/26

ISSUED FOR BID & PERMIT

9/4/2026

Sheet Title :

LEVEL 4 - SOUTH FLOOR PLAN - PLUMBING

Revisions : Date :

Drawn : DP Checked : DP

Sheet # :

P242

NOTE:

THIS IS A MASTER SYMBOLS LIST. ALL SYMBOLS, ABBREVIATIONS, ETC. MAY NOT NECESSARILY BE USED ON ALL DRAWINGS

ONE LINE AND RISER

PANEL, PANEL1, PANEL2 — PANEL

CURRENT TRANSFORMER, RATED AS SPECIFIED OR REQUIRED

M — MOTOR

TVSS — TRANSIENT VOLTAGE SURGE SUPPRESSION

GROUND CONNECTION

800A3P — SWITCH, RATING AS SHOWN

400A FRN — FUSE, FUSE AMPACITY AND TYPE AS SHOWN

800A3P — CIRCUIT BREAKER, RATING AS SHOWN

M — UTILITY METER (AS REQUIRED BY UTILITY)

SAFETY SWITCH, NON-FUSED, 240V, U.N.O.

FUSED DISCONNECT

COMBINATION STARTER (SIZE AS INDICATED)

T-XX — TRANSFORMER, TYPE AND RATING AS SHOWN

CONDUIT CONNECTION

CIRCUIT BREAKER WITH GROUND FAULT PROTECTION

FUSE WITH GROUND FAULT PROTECTION

MISCELLANEOUS

(#) KEY NOTE DESIGNATION

(#) KEY NOTE DESIGNATION

(X) EQUIPMENT TAG DESIGNATION

REVNO — REVISION NUMBER DESIGNATION

NEW TO EXISTING CONNECTION

NEW CONSTRUCTION

EXISTING CONDITIONS

DEMOLITION WORK

STANDARD MOUNTING HEIGHTS U.N.O.

RECEPTACLES (CENTERLINE)	18"
RECEPTACLES IN EQUIP. RMS.	48"
RECEPTACLES (EXTERIOR)	24"
RECEPTACLES (GARAGES)	24"
ALARMS, SWITCHES AND CONTROLS (CENTERLINE)	48"
TELEPHONE (PUBLIC)	1@48" AND 1@36"
TELEPHONE OUTLETS (BTM.)	18"
TELEPHONE TERMINAL BOARD (BTM.)	6"
SAFETY SWITCHES	48"
STARTERS	48"
PANELS (TOP)	72"
FIRE ALARM PULL STATIONS (HANDLE)	44"
STROBES (CENTERLINE)	80"*
FIRE ALARM BELLS (EXTERIOR)	12'-0"
CONTROLS (FIRE ALARM CONTROL PANEL)	48"
ANNUNCIATOR PANELS	48"
REMOTE INDICATING LIGHT (EQUIP. RMS.)	48"
REMOTE INDICATING LIGHT (FIN. AREAS)	CEILING
EXIT SIGNS (WALL MOUNTED BTM.)	80"
PHOTOCELLS	12'-0"

NOTE:
VERIFY, CONFIRM AND COORDINATE WITH ARCHITECTURAL SHEETS AND CURRENT APPLICABLE NFPA 70.

CONDUIT DESIGNATIONS-FLOOR PLANS

BRANCH CIRCUITS HOMERUN; USE NUMBER 12 AWG WIRE, UNLESS OTHERWISE NOTED. ALL CIRCUITS SHALL CONTAIN A GROUND AND NEUTRAL CONDUCTOR, UNLESS NOTED OTHERWISE

CONDUIT AND WIRE CONCEALED, 3/4" UNLESS OTHERWISE NOTED, CONDUIT USED FOR SWITCH LEGS, AND CONDUIT USED FOR CONTROL WIRING

CONDUIT AND WIRE EMBEDDED IN CONCRETE OR BELOW GRADE

CONDUIT TURNING DOWN

CONDUIT TURNING UP

POWER-FLOOR PLANS

PANELBOARD, ELECTRICAL DISTRIBUTION PANEL, OR LOAD CENTER SURFACE MOUNTED

PANELBOARD, ELECTRICAL DISTRIBUTION PANEL, OR LOAD CENTER RECESS MOUNTED

1.5 AMP (MINIMUM), 120V, 1P, DUPLEX RECEPTACLE

3 AMP (MINIMUM), 120V, 1P, QUAD RECEPTACLE

1.5 AMP (MINIMUM), 120V, 1P, DUPLEX RECEPTACLE, MOUNTED 6" ABOVE COUNTER AND/OR ABOVE BACKSPLASH, UNLESS OTHERWISE NOTED

1.5 AMP (MINIMUM), 120V, 1P, SWITCHED DUPLEX RECEPTACLE

1.5 AMP (MINIMUM), 120V, 1P, DUPLEX FLOOR RECEPTACLE, 3/4" CONDUIT RUN CONCEALED IN FLOOR SLAB

3 AMP (MINIMUM), 120V, 1P, QUAD FLOOR RECEPTACLE, 3/4" CONDUIT RUN CONCEALED IN FLOOR SLAB

JUNCTION BOX, FLOOR/CEILING MOUNTED

JUNCTION BOX, WALL MOUNTED

SPECIAL RECEPTACLES,CONFIGURATION AS NOTED ON PLAN

SPECIAL RECEPTACLES,WALL MOUNTED, CONFIGURATION AS NOTED ON PLAN

(#) MOTOR: HORSEPOWER AS INDICATED ON PLANS OR SCHEDULES

PLUGMOLD, REFER TO DRAWING FOR LENGTHS

SAFETY SWITCH, NON-FUSED, SIZE AND RATING AS INDICATED

FUSED DISCONNECT SIZE AND RATING AS INDICATED

COMBINATION STARTER (SIZE AND RATING AS INDICATED)

MOTOR/CT

S_1 SINGLE GANG DATA RECEPTACLE. SUBSCRIPT NUMBER DENOTES MINIMUM NUMBER OF AVAILABLE DATA PORTS.

FIRE ALARM

FACP — FIRE ALARM CONTROL PANEL

FARA — FIRE ALARM REMOTE ANNUNCIATOR PANEL

ACP — ACCESS CONTROL PANEL

(S) SMOKE DETECTOR, ADDRESSABLE PHOTO ELECTRIC

(H) HEAT DETECTOR

DUCT SMOKE DETECTOR, ADDRESSABLE PHOTO ELECTRIC

FIRE ALARM STROBE MOUNTED AT 80" AFF OR 6" BELOW CEILING WHICHEVER IS LOWER

FIRE ALARM HORN MOUNTED AT 80" AFF OR 6" BELOW CEILING WHICHEVER IS LOWER

FIRE ALARM AUDIBLE AND STROBE MOUNTED AT 80" AFF OR 6" BELOW CEILING, WHICHEVER IS LOWER

P — FIRE ALARM MANUAL PULL STATION, ADDRESSABLE DOUBLE ACTION

MAGNETIC DOOR HOLDER

KB — KEY BOX

FS — FIRE ALARM FLOW SWITCH

TS — FIRE ALARM TAMPER SWITCH

FIRE/SMOKE DAMPER

LIGHTING-FLOOR PLANS

FOR ALL FIXTURES BELOW:
"A1" LETTER DENOTES SWITCH CIRCUIT, NUMBER DENOTES LUMINAIRE/EQUIPMENT TYPE, HATCHING AND "EM" DENOTES EMERGENCY, # DENOTES CIRCUIT BREAKER, ZN DENOTES ZONE

ZN / A1 — 2' X 4' RECESSED LUMINAIRE

ZN / A1 — 2' X 4' SURFACE MOUNTED LUMINAIRE

ZN / A1 — 2' X 2' RECESSED LUMINAIRE

ZN / A1 — 2' X 2' SURFACE MOUNTED LUMINAIRE

ZN / A1 — 1' X 4' RECESSED LUMINAIRE

ZN / A1 — 1' X 4' SURFACE MOUNTED LUMINAIRE

ZN / A1 — 1' X 4' WALL MOUNTED LUMINAIRE

ZN / A1 — LINEAR PENDANT LUMINAIRE

ZN / A1 — PENDANT LUMINAIRE

ZN / A1 — STRIP TYPE LUMINAIRE

ZN / A1 — STRIP TYPE WALL MOUNTED LUMINAIRE

ZN / A1 — RECESSED MOUNTED DOWNLIGHT

ZN / A1 — SURFACE MOUNTED DOWNLIGHT

ZN / A1 — WALL MOUNTED LUMINAIRE

ZN / A1 — PENDANT DOWNLIGHT

ZN / A1 — WALL WASH LUMINAIRE

/ EXIT — CEILING MOUNTED EXIT SIGN.

A — LIGHT SWITCH

A — OCCUPANCY SENSOR.

MISCELLANEOUS ABBREVIATIONS

A	AMPS, AIR (COMPRESSED)
AC	ABOVE COUNTER
AFC	ABOVE FINISHED CEILING
AFCI	ARC FAULT CURRENT INTERRUPTER
AFF	ABOVE FINISHED FLOOR
AFG	ABOVE FINISHED GRADE
AHU	AIR HANDLING UNIT
AIC	AMPERE INTERRUPTING CURRENT
AL	ALUMINUM
ATS	AUTOMATIC TRANSFER SWITCH
AWG	AMERICAN WIRE GAUGE
BFF	BELOW FINISHED FLOOR
BKR	BREAKER
BOS	BOTTOM OF STRUCTURE
BTU	BRITISH THERMAL UNIT
C	CONDUIT
CATV	CABLE TELEVISION SYSTEM
CCTV	CLOSED CIRCUIT TELEVISION
CFM	CUBIC FEET PER MINUTE
CKT	CIRCUIT
CU	COPPER, CONDENSING UNIT
(D)	DEMOLISH, DEMO
DDC	DIRECT DIGITAL CONTROL
DN	DOWN
DPDT	DOUBLE POLE, DOUBLE THROW
DPST	DOUBLE POLE, SINGLE THROW
DX	DIRECT EXPANSION
(E)	EXISTING TO REMAIN
EPO	EMERGENCY POWER OFF
EM	EMERGENCY
FBO	FURNISHED BY OTHERS
FF	FINISHED FLOOR
FHC	FIRE HOSE CABINET
FLA	FULL LOAD AMPS
FLR	FLOOR
FVNR	FULL VOLTAGE, NON REVERSING
GFCI	GROUND FAULT CIRCUIT INTERRUPTER
GFR	GROUND FAULT RELAY
GND,G	GROUND
HOA	HAND OFF AUTOMATIC
HPS	HIGH PRESSURE SODIUM
HSTAT	HUMIDISTAT
HTG	HEATING
HTR	HEATER
IG	ISOLATED GROUND
KCMIL	1000 CIRCULAR MILS
KV	KILOVOLT
KVA	KILOVOLT AMPS
KVAR	KILOVOLT AMPS REACTIVE
KW	KILOWATT
KWH	KILOWATT HOUR
LF	LINEAR FEET
LRA	LOCKED ROTOR AMPS
MATV	MASTER ANTENNA TELEVISION SYSTEM
MBH	1000 BTU PER HOUR
MCA	MINIMUM CIRCUIT AMPACITY
MCB	MAIN CIRCUIT BREAKER
MCC	MOTOR CONTROL CENTER
MD	MOTORIZED DAMPER
MDP	MAIN DISTRIBUTION PANEL
MFR	MANUFACTURER
MG	MOTOR GENERATOR
MH	MANHOLE
MSB	MAIN SWITCHBOARD
MTD	MOUNTED
N/A	NOT APPLICABLE
NIC	NOT IN CONTRACT
N/L	NIGHT LIGHT
N/O,N/C	NORMALLY OPEN, NORMALLY CLOSED
OC	ON CENTER
PDU	POWER DISTRIBUTION UNIT
PH,Ø	PHASE
PIV	POST INDICATOR VALVE
PNL	PANEL
PT	POTENTIAL TRANSFORMER
QTY	QUANTITY
(R)	RELOCATE EXISTING DEVICE/EQUIPMENT
RA	RETURN AIR
RCP	REINFORCED CONCRETE PIPE
REV	REVISION
RH	RELATIVE HUMIDITY
RLA	RUNNING LOAD AMPS
RPM	REVOLUTIONS PER MINUTE
SA	SUPPLY AIR
SD	SMOKE DETECTOR
SF	SQUARE FEET
SPDT	SINGLE POLE, DOUBLE THROW
SPST	SINGLE POLE, SINGLE THROW
SP	STATIC PRESSURE
SWBD	SWITCHBOARD
TSTAT	THERMOSTAT
TL	TWISTLOCK
TYP	TYPICAL
U/F	UNDERFLOOR
U/G	UNDERGROUND
U/S	UNDER SLAB
UL	UNDERWRITERS LABORATORIES, INC.
UNO	UNLESS NOTED OTHERWISE
UPS	UNINTERRUPTIBLE POWER SUPPLY
VAC	VOLTS ALTERNATING CURRENT, VACUUM
VAV	VARIABLE AIR VOLUME
W/	WITH
W/O	WITHOUT
WP	WEATHERPROOF
WT	WATERTIGHT, WEIGHT
XFMR	TRANSFORMER
XP	EXPLOSION PROOF

Portland State UNIVERSITY
PSU CAPITAL PROJECTS & CONSTRUCTION

RMNC

RICHARD & MAURINE NEUBERGER CENTER

4TH FLOOR SPHR
INTERIOR REMODEL

PSU CAMPUS | BLOCK: 087
1600 SW 4TH AVENUE
PORTLAND, OREGON 97201

ISSUED FOR BID & PERMIT

REGISTERED PROFESSIONAL ENGINEER
101192PE
Joseph Wuest
OREGON
SEPT. 13, 2021
JOSEPH W. WUEST
EXPIRES: 06/30/28

9/4/2026

HALF SIZE WHEN PRINTED AT 11X17

Sheet Title :

SYMBOLS, LEGEND, & ABBREVIATIONS

Revisions :	Date :
*	07/08/2026

Drawn : JWW Checked : JWW

Sheet # : **E001**

GENERAL PROVISIONS

A. THE INTENT IS TO PROVIDE A COMPLETE AND WORKABLE FACILITY WITH COMPLETE SYSTEMS AS SHOWN, SPECIFIED AND REQUIRED BY APPLICABLE CODES. THE COMPLETED INSTALLATION SHALL CONFORM TO ALL APPLICABLE FEDERAL, STATE AND LOCAL CODES, ORDINANCES AND REGULATIONS INCLUDING NECESSARY PERMITS AND INSPECTIONS REQUIRED BY THE GOVERNING AUTHORITIES. DO ALL WORK IN A NEAT, WORKMANLIKE, FINISHED AND SAFE MANNER, ACCORDING TO THE LATEST PUBLISHED N.E.C.A. STANDARDS OF INSTALLATION, UNDER COMPETENT SUPERVISION. INSTALL GROUNDING AS REQUIRED BY THE NATIONAL ELECTRICAL CODE.

B. VISIT THE SITE PRIOR TO BIDDING TO BECOME FAMILIAR WITH EXISTING CONDITIONS AND ALL OTHER FACTORS WHICH MAY AFFECT THE EXECUTION OF THIS WORK. INCLUDE ALL RELATED COSTS IN THE INITIAL PROPOSAL.

C. ALL NEW MATERIALS SHALL BE OF THE BEST QUALITY, MANUFACTURED IN ACCORDANCE WITH NEMA, ANSI, U.L. OR OTHER APPLICABLE STANDARDS. THE USE OF MANUFACTURER'S NAMES, MODELS AND NUMBERS IS INTENDED TO ESTABLISH STYLE, QUALITY, APPEARANCE AND USEFULNESS. PROPOSED SUBSTITUTIONS WILL REQUIRE PRE-BID WRITTEN APPROVAL OF THE ARCHITECT.

D. SUBMIT FOR THE ARCHITECT'S APPROVAL A MATERIAL LIST CONTAINING THE MANUFACTURER'S DETAILED SPECIFICATIONS AND DATA SHEETS FOR EQUIPMENT TO BE FURNISHED. SUBMIT 6 COPIES OF DATA IN 3-POINT COVERED BINDERS, INDEXED BY SYSTEM, FOR THE FOLLOWING ITEMS OF EQUIPMENT AND SYSTEMS: BRANCH CIRCUIT PANELS, CIRCUIT BREAKERS, CONDUCTORS, WIRING DEVICES, RACEWAY AND LUMINAIRES.

E. PROTECT ALL ELECTRICAL MATERIAL AND EQUIPMENT INSTALLED UNDER THIS DIVISION AGAINST DAMAGE BY OTHER TRADES, WEATHER CONDITIONS OR ANY OTHER CAUSES. EQUIPMENT FOUND DAMAGED OR IN OTHER THAN NEW CONDITION WILL BE REJECTED AND REQUIRE REPLACEMENT.

F. KEEP OUTAGES TO OCCUPIED AREAS TO A MINIMUM AND PREARRANGE ALL OUTAGES WITH THE OWNER'S REPRESENTATIVE. REQUESTS FOR OUTAGES SHALL STATE THE SPECIFIC DATES AND HOURS AND THE MAXIMUM DURATION, WITH THE OUTAGES KEPT TO THESE SPECIFIC TIMES. THIS CONTRACTOR WILL BE LIABLE FOR ANY DAMAGES RESULTING FROM UNSCHEDULED OUTAGES OR FOR THOSE NOT CONFINED TO THE PREAPPROVED TIMES. INCLUDE ALL COSTS FOR OVERTIME LABOR AS NECESSARY TO MAINTAIN ELECTRICAL SERVICES IN THE INITIAL BID PROPOSAL.

G. TEMPORARY WIRING AND FACILITIES, IF USED, SHALL BE REMOVED AND THE SITE LEFT CLEAN BEFORE FINAL ACCEPTANCE.

H. REMOVE OR RELOCATE ALL ELECTRICAL WIRING, EQUIPMENT, FIXTURES, ETC., AS MAY BE ENCOUNTERED IN REMOVED OR REMODELED AREAS IN THE EXISTING CONSTRUCTION AFFECTED BY THIS WORK. WIRING WHICH SERVES USABLE EXISTING OUTLETS SHALL BE RESTORED AND ROUTED CLEAR OF THE CONSTRUCTION OR DEMOLITION. REMOVE ALL WIRING TO BE ABANDONED TO LEAVE SITE CLEAN. REMOVED MATERIALS NOT SCHEDULED FOR REUSE SHALL BECOME THE PROPERTY OF THE CONTRACTOR FOR REMOVAL FROM THE SITE.

I. COOPERATE WITH ALL OTHER TRADES FOR PROPER INSTALLATION OF ALL ITEMS OF EQUIPMENT. CONSULT THE DRAWINGS OF ALL OTHER TRADES OR CRAFTS TO AVOID CONFLICTS WITH CABINETS, COUNTERS, EQUIPMENT, STRUCTURAL MEMBERS, ETC. IN GENERAL, THE ARCHITECTURAL DRAWINGS GOVERN BUT CONFLICTS SHALL BE RESOLVED PRIOR TO ROUGH-IN.

J. LEAVE THE SITE CLEAN AND READY FOR OCCUPANCY. REMOVE ALL DIRT, DEBRIS, EMPTY CARTONS, TOOLS, CONDUIT AND WIRE SCRAPS AND ALL MISCELLANEOUS SPARE EQUIPMENT AND MATERIALS USED IN THIS DIVISION OF THE WORK DURING CONSTRUCTION. ALL COMPONENTS SHALL BE FREE OF DUST, GRIT AND FOREIGN MATERIALS, LEFT AS NEW BEFORE FINAL ACCEPTANCE OF WORK.

K. FURNISH WRITTEN GUARANTEE TO THE OWNER, EFFECTIVE FOR A PERIOD OF ONE YEAR AFTER DATE OF SUBSTANTIAL COMPLETION, COVERING ALL DEFECTS IN CONTRACTOR FURNISHED MATERIALS AND WORKMANSHIP. THE CONTRACTOR SHALL AGREE TO REMEDY ANY DEFECT BY REPLACEMENT OF DEFECTIVE PART WITHOUT ADDITIONAL COST TO OWNER DURING THE PERIOD OF GUARANTEE. INCANDESCENT LAMPS ARE EXEMPT FROM THE GUARANTEE.

SERVICE AND DISTRIBUTION

A. ALL MATERIALS SHALL BE NEW AND CURRENTLY MANUFACTURED.

B. ALL MATERIAL SHALL UL LABELED AND MEET ALL INDUSTRY STANDARDS.

C. PROVIDE ENGRAVED EQUIPMENT NAME PLATES ON ALL EQUIPMENT, NEW NAME PLATES TO MATCH EXISTING STYLE AND COLOR.

D. PROVIDE ALL SUPPORT HARDWARE AND SYSTEMS FOR ELECTRICAL WORK.

E. CONDUIT/RACEWAYS:

1. ALL WIRING FOR POWER AND SYSTEMS SHALL BE CONDUCTORS IN CONDUIT AND SHALL BE CONCEALED IN WALLS, ABOVE CEILINGS, IN SLABS OR UNDERGROUND, AND SHALL BE OF THE FOLLOWING MATERIALS:

   a. FEEDER- RIGID STEEL EXCEPT ABOVE 8'-0" THEN EMT
   b. BRANCH CIRCUIT, TELEPHONE AND COMMUNICATION-EMT
   c. FINAL CONNECTIONS FROM OUTLET BOXES TO LIGHT FIXTURES, MOTORS, OR APPLIANCES-FLEXIBLE STEEL CONDUIT MAXIMUM 48"

2. EXPOSED WIRING SHALL BE IN CONDUIT AND SHALL BE ROUTED AS HIGH AS POSSIBLE AND PARALLEL OR PERPENDICULAR TO STRUCTURAL ELEMENTS.

3. PAINT ALL EXPOSED CONDUITS, COLOR AS DIRECTED BY OWNER.

4. INSULATED CONDUIT BUSHINGS AT EACH END OF EVERY CONDUIT RUN.

F. CONDUCTORS:

1. PROVIDE CONDUCTORS FOR ALL CIRCUITING, WIRING, AND SYSTEMS.

2. CONDUCTORS SHALL BE PROPERLY PHASE AND COLOR CODED:

a. COLOR CODING:	208Y/120V	480Y/277V
PHASE A	BLACK	BROWN
PHASE B	RED	ORANGE
PHASE C	BLUE	YELLOW
NEUTRAL	WHITE	GRAY
GROUND	GREEN	GREEN

3. UTILIZE CONDUCTORS AND CONNECTORS AS FOLLOWS:

   a. STRANDED COPPER THHN/THWN COLOR CODED.

   b. TYPE MC FLEXIBLE CABLE WITH ISOLATED GROUND WIRE.

   c. TWIST ON TYPE FOR #8 AND SMALLER COPPER CONNECTIONS.

   d. SET SCREW/BOLTED TYP. FOR #4 AND LARGER COPPER CONNECTORS.

   e. COMPLETELY INSULATE EACH CONNECTION, SPLICE AND TERMINATE.

   f. USE OF ALUMINUM (AL) IS STRICTLY PROHIBITED.

   g. MINIMUM CONDUCTOR SIZE SHALL BE #12 AWG WITH THWN INSULATION IN CONDUIT.

4. LABEL CIRCUIT ON THE CONDUCTOR AT EACH BOX.

G. WALL SWITCHES:

1. ACUITY NLIGHT WALL SWITCHES AS SPECIFIED PER DESIGN OR OWNER APPROVED ALTERNATE.

H. RECEPTACLES, UNLESS SPECIFIED ON THE DWGS:

1. DUPLEX: 20 AMPERE, GROUNDED, COMMERCIAL SPECIFICATION GRADE.

2. ALL RECEPTACLES SHALL BE RECESSED, UNLESS NOTED OTHERWISE.

I. OUTLET BOXES:

1. ATTACH SECURELY TO BUILDING CONSTRUCTION SUPPORT.

2. MASONARY BOXES RACO OR STEEL CITY.

3. EXPOSED BOXES CAST TYPE SIMILAR TO HINDS FS.

4. ALL OTHERS STAMPED STEEL.

J. GROUNDING:

1. PROVIDE EQUIPMENT GROUNDING CONDUCTOR IN EACH CONDUIT. 2. PROVIDE GROUNDING FOR PANELBOARD AND EQUIPMENT.

K. LOAD CENTERS:

1. THREE PHASE, 4 WIRE, COPPER BUSES.

2. GROUND BUS WITH SET SCREW CONNECTION.

3. BAKED-ON ENAMEL TRIM.

4. BOLT-ON BREAKERS.

5. CIRCUIT BREAKERS USED TO SWITCH LIGHTING CIRCUITS SHALL BE "SWD" RATED.

6. PANEL SCHEDULE TYPEWRITTEN ONLY.

7. ACCEPTABLE MANUFACTURERS: EATON, SQUARE D, GENERAL ELECTRIC, CUTLER-HAMMER, OR OWNER APPROVED ALTERNATE.

8. BALANCE PHASE LOADS SO THAT THEY ARE AS CLOSE TO EQUAL AS POSSIBLE, AND IN ACCORDANCE WITH THE NATIONAL ELECTRICAL CODE

M. LIGHTING FIXTURES:

1. LIGHT FIXTURES SHALL BE PROVIDED BY CONTRACTOR. CONTRACTOR SHALL BE RESPONSIBLE FOR MOUNTING AND FINAL CONNECTION OF ALL FIXTURES INCLUDING, BUT NOT LIMITED TO, RECESSED LIGHT, DOWN LIGHTS, PENDANT LIGHTS, DISPLAY CASE LIGHTING, TASK LIGHTING, AND REQUIRED EMERGENCY LIGHTS.

2. COORDINATE FIXTURE TRIM AND MOUNTING ACCESSORIES WITH CEILING TYPE IN/ON WHICH IT IS BEING INSTALLED.

3. PROVIDE ELECTRONIC/DIMMING.

4. MATCH VOLTAGE OF FIXTURE TO CIRCUIT TO WHICH IT IS SHOWN CONNECTED.

5. NARRATIVE DESCRIPTION IN LIGHTING FIXTURE SCHEDULE TAKES PRECEDENCE OVER CATALOG NUMBER.

N. TELEPHONE/TELECOM/AV/IT/ACCESS CONTROL SERVICE:

1. PROVIDE 1" CONDUIT FROM RECESSED DEVICE BOX TO ABOVE

2. TERMINATE RACEWAY WITH SMOOTH INSULATED BUSHING AND INSTALL NYLON PULL WIRE.

O. WIRING DEVICE COVER PLATES AND DEVICES:

1. ALL RECEPTACLE AND TELEPHONE PLATES SHALL BE NEW BRUSHED FINISHED ALUMINUM WITH GRAY DEVICES.

   a. MOUNTING HEIGHTS ARE NOTED ABOVE FINISHED FLOOR, REFER TO ARCHITECTURAL ELEVATIONS.

2. WIRING DEVICES SHALL BE COMPLETE WITH ALL HARDWARE AND COVER PLATES AND SHALL BE GROUNDED TO BOX BY GREEN GROUND WIRE PIGTAIL.

3. PROVIDE DEDICATED DEVICES FOR ALL EQUIPMENT, ITEMS, AND APPLIANCES.

ELECTRICAL GENERAL NOTES:

1. ELECTRICAL DRAWINGS ARE SCHEMATIC IN NATURE. DO NOT SCALE ELECTRICAL DRAWINGS. VERIFY DIMENSIONS ON ARCHITECTURAL DRAWINGS AND IN FIELD PRIOR TO COMMENCEMENT OF WORK. COORDINATE DEVICE LOCATIONS WITH ARCHITECTURAL FURNITURE PLANS. VERIFY FINAL LOCATIONS WITH ARCHITECT PRIOR TO ROUGH-IN.

2. CONTRACTOR SHALL MAKE ALL FINAL CONNECTIONS TO EQUIPMENT. FINAL CONNECTIONS TO EQUIPMENT SHALL BE IN ACCORDANCE WITH MANUFACTURER'S APPROVED WIRING DIAGRAMS, DETAILS, AND INSTRUCTIONS. IT SHALL BE THE CONTRACTOR'S RESPONSIBILITY TO PROVIDE MATERIALS AND EQUIPMENT COMPATIBLE WITH EQUIPMENT ACTUALLY SUPPLIED.

3. REVIEW ARCHITECTURAL, STRUCTURAL, MECHANICAL AND OTHER DRAWINGS PRIOR TO BID. PROVIDE COORDINATION AMONG ALL TRADES AS NECESSARY FOR COMPLETE INSTALLATION OF ALL WORK DESCRIBED IN THESE DOCUMENTS.

4. WORK SHALL BE PERFORMED IN A WORKMANLIKE MANNER TO THE SATISFACTION OF THE ARCHITECT.

5. WORK, MATERIALS, AND EQUIPMENT SHALL CONFORM TO THE LATEST EDITIONS OF LOCAL, STATE OF OREGON, AND NATIONAL CODES AND ORDINANCES.

6. PROVIDE PERMITS AND INSPECTIONS REQUIRED.

7. SYSTEMS SHALL BE TESTED FOR PROPER OPERATION. IF TESTS SHOW THAT WORK IS DEFECTIVE, CONTRACTOR SHALL MAKE CORRECTIONS NECESSARY AT NO COST TO OWNER.

8. CONTRACTOR SHALL BE RESPONSIBLE FOR REPLACING EQUIPMENT WHICH IS DAMAGED DUE TO INCORRECT FIELD WIRING PROVIDED UNDER THIS SECTION, OR FACTORY WIRING IN EQUIPMENT PROVIDED UNDER THIS SECTION.

9. CONTRACTOR'S FAILURE TO ORDER OR RELEASE ORDER FOR MATERIALS AND/OR EQUIPMENT WILL NOT BE ACCEPTED AS A REASON TO SUBSTITUTE ALTERNATE MATERIALS, EQUIPMENT, OR INSTALLATION METHODS.

10. SYSTEMS SHALL BE COMPLETE AND READY FOR CONTINUOUS OPERATION. LIGHTS, SWITCHES, RECEPTACLES, MOTORS, ETC. SHALL BE CONNECTED AND OPERABLE.

11. ALL EMPTY CONDUITS SHALL BE PROVIDED WITH A PULL STRING LABELED AT EACH END TO INDICATE LOCATION.

12. COORDINATE LOCATIONS OF ELECTRICAL EQUIPMENT TO AVOID OBSTRUCTIONS AND MAINTAIN CODE REQUIRED CLEARANCES.

13. RECESSED FIXTURES INSTALLED INDOORS SHALL BE THERMALLY PROTECTED.

14. REFER TO DIVISION 15 DRAWINGS FOR LOCATION OF MECHANICAL EQUIPMENT. PROVIDE SERVICE TO, AND CONNECT EQUIPMENT AS REQUIRED.

15. WHERE PANELS ARE INSTALLED FLUSH WITH WALLS, EMPTY CONDUITS SHALL BE EXTENDED FROM THE PANEL TO AN ACCESSIBLE SPACE ABOVE OR BELOW. A MINIMUM OF ONE 3/4" CONDUIT SHALL BE INSTALLED FOR EVERY THREE SINGLE POLE SPARE CIRCUIT BREAKERS OR SPACES, OR FRACTION THEREOF, BUT NOT LESS THAN TWO CONDUITS.

16. ALL ELECTRICAL SYSTEM COMPONENTS SHALL BE LISTED BY UL OR OTHER RECOGNIZED TESTING FACILITY FOR THE PURPOSE THAT THE COMPONENT IS USED.

17. WIRE TERMINATION PROVISIONS FOR PANELBOARDS, CIRCUIT BREAKERS, SAFETY SWITCHES, AND ALL OTHER ELECTRICAL APPARATUS SHALL BE LISTED AS SUITABLE FOR 75 DEGREES C., DUAL RATED CU/AL.

18. ALL 120V ELECTRICAL CIRCUITS SERVING SLEEPING AREAS IN DWELLING UNITS SHALL BE CIRCUITED TO AFI CIRCUIT BREAKERS, INCLUDING RECEPTACLES, LIGHT FIXTURES, LINE VOLTAGE SMOKE DETECTORS, ETC.

19. CONTRACTOR SHALL BE RESPONSIBLE FOR INSTALLING RECEPTACLES IN DWELLING UNITS AS REQUIRED TO MEET N.E.C. SPACING REQUIREMENTS. MODIFY SPACING AND/OR PROVIDE ADDITIONAL DEVICES AS REQUIRED TO MEET FIELD INSTALLATION REQUIREMENTS.

20. COORDINATE PLACEMENT OF DEVICES IN FIRE RATED WALLS WITH UL ASSEMBLY LISTING FOR WALL. PROVIDE SPACE BETWEEN OUTLETS AND/OR FIRE RATED PUTTY PADS AS REQUIRED TO MAINTAIN FIRE RATING.

21. MAINTAIN MINIMUM OF 12" SEPARATION OF BACK TO BACK DEVICES FOR NOISE MITIGATION.

22. COORDINATE DEVICE PLACEMENT IN DWELLING UNITS WITH ARCHITECTURAL AND INTERIOR DESIGN PLANS, ELEVATIONS AND DETAILS.

23. CONTRACTOR SHALL COORDINATE DEVICE ROUGH-IN AND INSTALLATION REQUIREMENT IN DWELLING UNITS WITH MANUFACTURER'S RECOMMENDATIONS FOR DISHWASHERS, MICROWAVES, FLAT PANEL TELEVISIONS, GAS FIREPLACES, COOKTOPS, KITCHEN RECIRCULATION HOODS, MAKEUP MIRRORS AND OTHER SPECIAL APPLIANCES.

ELECTRICAL SCOPE OF WORK (SOW):

DEMO:
1. DEMO ALL EXISTING POWER RECEPTACLES BACK TO THE SOURCE.
2. DEMO ALL EXISTING DATA RECEPTACLES AND WIRELESS ACCESS POINTS BACK TO THE SOURCE.
3. DEMO ALL EXISTING LIGHT FIXTURES, LIGHTSWITCHES, OCCUPANCY SENSORS, POWERPACKS, AND BRIDGES BACK TO THE SOURCE. RETURN SALVAGEABLE COMPONENTS TO OWNER.
4. DEMO ALL EXISTING EXIT SIGNS BACK TO THE SOURCE.
5. DEMO ELECTRICAL PANELS MCB-N2P4B3 (R-4) ON THE 4TH FLOOR AND MCB-N2P3B3A (R-3) ON THE 3RD FLOOR FOR REPLACEMENT.
6. DEMO ELECTRICAL PANELS MCB-N2P4B2A (2B-2-4) AND R4-2 FOR RELOCATION AND REUSE.
7. DEMO TRANSFORMER MCB-NT4B2 (T-4-1) FOR RELOCATION AND REUSE.
8. DEMO THE 480V TO 208/120V, 30KVA TRANSFORMER FEEDING PANEL MCB-N2P3B3 ON THE 3RD FLOOR.
9. DEMO 480/277V, 3 PHASE, 4 WIRE PANEL MCB-E4P4B3.
10. DEMO 480/277V, 3 PHASE, 4 WIRE PANEL MCB-N4P4B2.
11. DEMO FUSES IN DISCONNECT FEEDING PANEL MCB-N4P4B2.

INSTALL:
1. FURNISH AND INSTALL POWER RECEPTACLES PER DESIGN. ALL POWER TO BE FED FROM PANEL MCB-N2P4B3.
2. FURNISH AND INSTALL DATA RECEPTACLES AND WIRELESS ACCESS POINTS PER DESIGN. ALL DATA TO BE FED FROM ROOM 406 TELECOM RACKS.
3. FURNISH AND INSTALL NEW LIGHT FIXTURES, LIGHTSWITCHES, OCCUPANCY SENSORS, POWERPACKS, AND BRIDGES PER DESIGN. SEE BELOW FOR BASIS OF DESIGN:
   - 3.1. LIGHT FIXTURES:
     - 3.1.1. LITHONIA BLT FOR 2X2 AND 2X4 FIXTURES.
     - 3.1.2. MARK LIGHTING SLOT FOR STRIP LIGHTING.
     - 3.1.3. VISA LIGHTING CORONA FOR WALL SCONCES.
   - 3.2. LIGHTSWITCHES:
     - 3.2.1. ACUITY ON/OFF WITH DIM AS STANDARD FOR SINGLE ZONE AREAS.
     - 3.2.2. ACUITY ON/OFF WITH DIM AND SCENE SELECTION FOR MULTI-ZONE AREAS.
     - 3.2.3. ACUITY ON/OFF WITH BUILT-IN OCCUPANCY SENSOR FOR UTILITY SPACES.
   - 3.3. LIGHTING CONTROLS:
     - 3.3.1. NLIGHT AIR WITH NEW ECLYPSE PANEL IN ROOM 406.
4. ELECTRICAL EQUIPMENT:
   - 4.2. REUSE ELECTRICAL PANEL MCB-N2P4B2A FOR DEMOED PANEL MCB-N2P3B3A.
   - 4.3. REUSE ELECTRICAL PANEL R-4-2 FOR DEMOED PANEL MCB-N2P4B3.
   - 4.4. REINSTALL TRANSFORMER MCB-NT4B2 DIRECTLY FEEDING PANEL MCB-N2P4B2B.
   - 4.5. PROVIDE NEW 480V TO 208/120V, 45KVA TRANSFORMER FEEDING PANEL MCB-N2P3B3 ON THE 3RD FLOOR.
   - 4.6. PROVIDE NEW 480V TO 208/120V, 45KVA TRANSFORMER FEEDING PANEL MCB-N2P4B3 ON THE 4TH FLOOR.
   - 4.7. PROVIDE NEW 480/277V, 3 PHASE, 4 WIRE PANEL MCB-E4P4B3. MINIMUM RATING OF 40A WITH A MINIMUM OF 30 POLES.
   - 4.8. PROVIDE NEW 480/277V, 3 PHASE, 4 WIRE PANEL MCB-N4P4B2. MINIMUM RATING OF 70A WITH A MINIMUM OF 30 POLES.

FIRE ALARM SCOPE OF WORK (SOW):

DEMO:
1. DEMO EXISTING FIRE ALARM AND DETECTION SYSTEMS BACK TO THE 4TH FLOOR SOURCE.

INSTALL:
1. REINSTALL THE FIRE ALARM AND DETECTION SYSTEMS.

ACCESS CONTROL (SOW):

INSTALL:
1. INSTALL TWO NEW CARD READERS IN THE MAIN ELEVATOR LOBBY.
2. INSTALL NEW ACCESS CONTROL PANEL AND BOARDS AS NEEDED.
3. ENSURE TWO EXISTING CARD READERS IN STAIRWELLS REMAIN FUNCTIONAL.
4. COORDINATE WITH OTHER DISCIPLINES THE PREPARATION OF THREE DOORS FOR FUTURE CARD READERS.

Portland State UNIVERSITY
PSU CAPITAL PROJECTS & CONSTRUCTION

RMNC
RICHARD & MAURINE NEUBERGER CENTER

4TH FLOOR SPHR
INTERIOR REMODEL

PSU CAMPUS | BLOCK: 087
1600 SW 4TH AVENUE
PORTLAND, OREGON 97201

ISSUED FOR BID & PERMIT

REGISTERED PROFESSIONAL ENGINEER
101192PE
Joseph Wuest
OREGON
SEPT 13, 2022
JOSEPH W. WUEST

EXPIRES: 06/30/28
9/4/2026

HALF SIZE WHEN PRINTED AT 11X17

Sheet Title :
SPECIFICATIONS

Revisions :	Date :
*	07/08/2026

Drawn : JWW Checked : JWW

Sheet # : **E002**

LIGHTING SCHEDULE (1)(2)

NO.	MFR	MODEL	QTY	VOLT	WATT	LUMEN	COLOR	DIM	CONTROL	NOTES
1a	LITHONIA	2BLT4 40L ADPT EZ1 LP835 NLTAIR2 RES7PDT	78	MVOLT	30.5	4000	35K	1%	LLLC	2X4
1b	LITHONIA	2BLT4 40L ADPT EZ1 LP835 NLTAIR2 RES7PDTEM	16	MVOLT	30.5	4000	35K	1%	LLLC	EMERGENCY FIXTURE
2a	LITHONIA	2BLT2 40L ADPT EZ1 LP835 NLTAIR2 RES7PDT	3	MVOLT	31.0	4000	35K	1%	LLLC	2X2
2b	LITHONIA	2BLT2 40L ADPT EZ1 LP835 NLTAIR2 RES7PDTEM	3	MVOLT	31.0	4000	35K	1%	LLLC	EMERGENCY FIXTURE
3a	LITHONIA	BLT4 40L ADPT EZ1 LP835 NLTAIR2 RES7PDT	23	MVOLT	32.1	4000	35K	1%	LLLC	1X4
3b	LITHONIA	BLT4 40L ADPT EZ1 LP835 NLTAIR2 RES7PDTEM	14	MVOLT	32.1	4000	35K	1%	LLLC	EMERGENCY FIXTURE
4a	LITHONIA	LSIX 4FT 4000LM 80CRI 35K FFR SWL MIN1 ZC MVOLT MW NLTAIR2 APDT	38	MVOLT	33.3	4000	35K	1%	LLLC	0.5X4
4b	LITHONIA	LSIX 4FT 4000LM 80CRI 35K FFR SWL MIN1 ZC MVOLT MW NLTAIREM2 APDT	35	MVOLT	33.3	4000	35K	1%	LLLC	EMERGENCY FIXTURE
5	LITHONIA	LSIX 2FT 2000LM 80CRI 35K FFR SWL MIN1 ZC MVOLT MW NLTAIR2 APDT	9	MVOLT	17.0	2000	35K	1%	LLLC	0.5X2
6a	MARK	S2PD LCB 4FT MSL4 90CRI 35K 300LMF SCT MIN1 FLL MVOLT WHTT NLTAIR2 APDT F1/ 36A RDCY WHTCY WRCD	4	MVOLT	9.52	1200	35K	1%	LLLC	PENDANT (4')
6b(1)	MARK	SR2D LOP 14FT 0D TG 90CRI 35K 300LMF WW SCT MIN1 FLL MVOLT WHTT NLTAIR2 APDT7 SAPDT7	1	MVOLT	36.12	4200	35K	1%	LLLC	RECESSED (14')
6b(2)	MARK	SR2D LOP 8FT 0D FL 90CRI 35K 300LMF WG SCT MIN1 FLL MVOLT WHTT NLTAIR2 APDT8	2	MVOLT	20.64	2400	35K	1%	LLLC	RECESSED (8')
6b(3)	MARK	SR2D LOP 8FT 0D FL 90CRI 35K 300LMF WG SCT MIN1 FLL MVOLT WHTT 1EC NLTAIR2 APDT8	2	MVOLT	20.64	2400	35K	1%	LLLC	RECESSED (8') EMERGENCY
6b(4)	MARK	S2RD LOP 4FT 0D TG 90CRI 35K 300LMF SCT MIN1 FLL MVOLT WHTT NLTAIR2 APDT4	2	MVOLT	10.32	1200	35K	1%	LLLC	RECESSED (4')
6c	MARK	S2SD LCB 4FT MSL4 90CRI 35K 300LMF SCT MIN1 FLL MVOLT WHTT NLTAIR2 APDT	6	MVOLT	9.52	1200	35K	1%	LLLC	SURFACE (4')
7	VISA LIGHTING	MASQUE CB6250 L35K(H) MVOLT x x	29	MVOLT	21.0	1300	35K	0-10V	0-10V	WALL SCONCE
8	EUREKA	ORELIA 3404 LED 35 90 277V DV WHE FRO 3983	4	277	3.7	371	35K	0-10V	0-10V	PENDANT
9a	EUREKA	ATOLL ROUND 4850DI-B 24 LED LED 35 90 277 NLTAIR2 x AC x x x WHE WH WHE	2	277	19.3/19.3	1884/2728	35K	0-10V	WIRELESS	24" FIXTURE WITH EMBEDDED CONTROLS
9b	EUREKA	ATOLL ROUND 4850DI-B 36 LED LED 35 90 277 NLTAIR2 x AC x x x WHE WH WHE	1	277	28.4/28.4	3779/4021	35K	0-10V	WIRELESS	36" FIXTURE WITH EMBEDDED CONTROLS
10	LITHONIA	CSS L48 ALO3 MVOLT MIN10 ZT SWW3 80CRI	3	MVOLT	30	4360	35K	0-10V	NO	UTILITY STRIP LIGHT
11	REMPHOS	RP-LBI-G1-4F-15W-40K-WC	3	MVOLT	15	1344	35K	NO	NO	UNDER COUNTER LIGHT
12	MARK	MGLSW 12IN 80CRI TUWH PROR 600LM DARK EGLD MVOLT FLT WHTT NLT	1	MVOLT	10	590	40K	0.10%	0-10V	DOWNLIGHT

LIGHTSWITCH SCHEDULE (1)(2)

NO.	MFR	MODEL	QTY	NOTES
1	ACUITY	RPODLA DX MVOLT WH G2	26	ONE POLE WITH DIMMING
2	ACUITY	RPODLA 2P DX MVOLT WH G2	29	TWO POLE WITH DIMMING
3	ACUITY	RPODLA 2S DX MVOLT WH G2	10	TWO SCENE WITH DIMMING
4	ACUITY	RPODU WH G2	1	BATTERY ONE POLE (NO DIMMING)
5	ACUITY	NWSXA PDT LV WH	3	ONE POLE BUILT-IN OCC SENSOR

EXIT SIGNS (1)(2)

MFR	MODEL	QTY	NOTES
LITHONIA	EDGR W x x	12	FIELD DETERMINE SINGLE OR DOUBLE FACE. USE RED ON CLEAR OR RED ON MIRROR.

EQUIPMENT SCHEDULE (2)

EQUIPMENT NAME	MANUFACTURER	PART NUMBER	QTY	VOLT	AMPS	CONFIG	DESCRIPTION
MCB-N2P3B3	SQUARE D	NQ442L2C	1	240	225	3Φ, 4W	REUSED PANELBOARD (42-POLE)
	SQUARE D	MH50	1				REUSED TYPE 1 ENCLOSURE (20"Wx50"Hx5.75"D)
	SQUARE D	NC50S	1				REUSED TYPE 1 ENCLOSURE COVER
	SQUARE D	NQMB2Q	1				REUSED MAIN BREAKER KIT
	SQUARE D	**QDL32150**	**1**	**240**	**150**	**3P**	**MAIN BREAKER**
	SQUARE D	**QOB120**	**35**	**120/240**	**20**	**1P**	**BOLT ON CB**
	SQUARE D	**QOB130**	**1**	**120/240**	**30**	**1P**	**BOLT ON CB**
	SQUARE D	**QOB3125**	**1**	**240**	**125**	**3P**	**BOLT ON CB FOR SUBFEEDING ANOTHER PANEL**
MCB-N2P4B3	SQUARE D	NQ442L2C	1	240	225	3Φ, 4W	REUSED PANELBOARD (42-POLE)
	SQUARE D	MH50	1				REUSED TYPE 1 ENCLOSURE (20"Wx50"Hx5.75"D)
	SQUARE D	**NC50SHR**	**1**				**TYPE 1 ENCLOSURE COVER (HINGED)**
	SQUARE D	**NQMB2Q**	**1**				**MAIN BREAKER KIT**
	SQUARE D	**QDL32125**	**1**	**240**	**125**	**3P**	**MAIN BREAKER**
	SQUARE D	QOB120	16	120	20	1P	REUSED BOLT ON CB
	SQUARE D	**QOB120**	**16**	**120/240**	**20**	**1P**	**BOLT ON CB**
MCB-N2P4B2	**SIEMENS**	**QP BREAKER**	**13**	**120**	**20**	**1P**	**PLUG-IN CB**
MCBN4P4B2	**EATON**	**PRL2X3100X18C**	**1**	**480/277**	**100**	**3Φ, 4W**	**PANELBOARD (18-POLE)**
	EATON	**EZB2036R**	**1**				**TYPE 1 ENCLOSURE (20"Wx36"Hx5.75"D)**
	EATON	**EZT2036S**	**1**				**TYPE 1 ENCLOSURE COVER (HINGED)**
	EATON	**GHB1020**	**8**	**277**	**20**	**1P**	**BOLT ON CB**
	EATON	**GHB3020**	**1**	**480/277**	**20**	**3P**	**BOLT ON CB**
MCB-E4P4B3	**EATON**	**PRL2X3100X42C**	**1**	**480/277**	**100**	**3Φ, 4W**	**PANELBOARD (42-POLE)**
	EATON	**EZB2048R**	**1**				**TYPE 1 ENCLOSURE (20"Wx48"Hx5.75"D)**
	EATON	**EZT2048S**	**1**				**TYPE 1 ENCLOSURE COVER (HINGED)**
	EATON	**4180B05H01**	**1**				**MAIN BREAKER COVER**
	EATON	**BKG2G100**	**1**	**480/277**	**100**	**3P**	**MAIN BREAKER & KIT**
	EATON	**GHB1020**	**20**	**277**	**20**	**1P**	**BOLT ON CB**
	EATON	**GHB3015**	**4**	**480/277**	**15**	**3P**	**BOLT ON CB**
MCB-NDP4C2	**EATON**	**DG321UGB**	**1**	**240**	**30**	**3P**	**DISCONNECT (6.38"Wx10.69"Hx3.75"D)**
MCB-NDP4B4	**EATON**	**DG321UGB**	**1**	**240**	**30**	**3P**	**DISCONNECT (6.38"Wx10.69"Hx3.75"D)**
MCBNT3B3	**HAMMOND POWER SOLUTIONS**	**SG3A0045KB**	**1**	**480-208/120**	**45KVA**	**Δ-Y**	**XFMR (28.8"Wx28.8"Hx23.8"D)**
MCBNT4B3	**HAMMOND POWER SOLUTIONS**	**SG3A0045KB**	**1**	**480-208/120**	**45KVA**	**Δ-Y**	**XFMR (28.8"Wx28.8"Hx23.8"D)**

GENERAL NOTES

1. PRIOR TO INITIATING AND PERFORMING WORK, COORDINATE CONSTRUCTION AND ANY REQUIRED OUTAGES WITH PSU.
2. ALL ELECTRICAL WORK IS TO BE COMPLETED IN ACCORDANCE WITH THE CURRENT NATIONAL ELECTRIC CODE AND ALL OTHER APPLICABLE CODES.
3. FIELD VERIFY EXISTING CONDITIONS RELATED TO SCOPE OF WORK AND NOTIFY THE ENGINEER OF ANY DISCREPANCIES THAT CHANGE THE SCOPE OF WORK.
4. ALL EQUIPMENT AND PARTS CURRENTLY EXISTING IN THE FIELD ARE TO REMAIN UNLESS OTHERWISE NOTED.
5. REFERENCE ARCHITECTURAL DRAWINGS FOR WALL TYPES. PATCH AND PAINT AS REQUIRED TO REPAIR DAMAGE FROM WORK.
6. REFERENCE STRUCTURAL DRAWINGS FOR ALL PENETRATIONS AND SUPPORTS. SEAL ALL PENETRATIONS.
7. PROVIDE SUBMITTALS TO OWNER FOR ALL PARTS AND EQUIPMENT PRIOR TO FINALIZING ORDER.

KEYED NOTES (#)

1. ELECTRICAL CONTRACTOR TO COORDINATE FIXTURE FINISHES AND MOUNTING HEIGHTS/POSITIONS WITH ARCHITECT AND INTERIOR DESIGNER VIA SUBMITTAL PROCESS.
2. ELECTRICAL CONTRACTOR TO VERIFY COUNTS AND ENSURE ALL PARTS AND PIECES ARE ORDERED FOR A FULL AND COMPLETE INSTALLATION.

Portland State UNIVERSITY
PSU CAPITAL PROJECTS & CONSTRUCTION

RMNC
RICHARD & MAURINE NEUBERGER CENTER

4TH FLOOR SPHR
INTERIOR REMODEL

PSU CAMPUS | BLOCK: 087
1600 SW 4TH AVENUE
PORTLAND, OREGON 97201

ISSUED FOR BID & PERMIT

REGISTERED PROFESSIONAL ENGINEER
101192PE
Joseph Wuest
OREGON
SEPT. 13, 2022
JOSEPH W. WUEST
EXPIRES: 06/30/28

9/4/2026

HALF SIZE WHEN PRINTED AT 11X17

Sheet Title :
EQUIPMENT & LIGHTING SCHEDULES

Revisions : *
Date : 08/21/2026

Drawn : JWW
Checked : JWW

Sheet # : **E003**

LIGHTING CONTROL SEQUENCE OF OPERATION

ROOM TYPE	CONTROL TYPE										
	ZONE CONTROL	PHOTOCELL (AS APPLICABLE)	OCCUPANCY SENSOR				TIMECLOCK	OCC SENSOR	WALLSTATIONS	EMERGENCY DEVICES	DEMAND RESPONSE
			ON OPERATION	OFF OPERATION	TIMEOUT BUSINESS HOURS	TIMEOUT OFF HOURS					
PRIVATE OFFICE < 250SF	REFER TO PLANS	50FC	AUTOMATIC OCCUPANCY ON TO 80% OR MANUAL OVERIDE ON TO 80%	AUTOMATIC OCCUPANCY OFF OR MANUAL OVERIDE OFF	20 MIN TO 10% 60 MIN TO OFF	10 MIN TO 10% 15 MIN TO OFF	TIMECLOCK/ SCHEDULING TO SET CONTROL PROFILES FOR BUSINESS HOURS AND AFTERHOURS OPERATION	LLLC FIXTURES	LOW VOLTAGE WALL STATION WITH ON/OFF/DIM CONTROL	FOR LIGHTS DENOTED ON PLANS AS EMERGENCY, PROVIDE UL924 DEVICE(S) TO AUTOMATICALLY TURN ON LIGHTS TO FULL BRIGHTNESS UPON LOSS OF NORMAL POWER OR FIRE ALARM SYSTEM ACTIVATION. UNDER NORMAL CONDITIONS, ALL EMERGENCY LIGHTS SHALL BE CONTROLLED IN THE SAME MANNER AS THE NEARBY NORMAL POWER LIGHTS	N/A
SUPPORT ROOM		N/A	AUTOMATIC OCCUPANCY ON TO 80% OR MANUAL OVERIDE ON TO 80%	AUTOMATIC OCCUPANCY OFF OR MANUAL OVERIDE OFF	20 MIN TO 10% 60 MIN TO OFF	10 MIN TO 10% 15 MIN TO OFF		EITHER WALLSTATION OR OVERHEAD	TYPICAL: LOW VOLTAGE COMBINATION OCCUPANCY SENSOR WALL STATION WITH ON/OFF CONTROL. CONFIRM WITH OWNER		
KITCHENETTE/BREAK		N/A	AUTOMATIC OCCUPANCY ON TO 80% OR MANUAL OVERIDE ON TO 80%	AUTOMATIC OCCUPANCY OFF OR MANUAL OVERIDE OFF	20 MIN TO 10% 60 MIN TO OFF	10 MIN TO 10% 15 MIN TO OFF		LLLC FIXTURES	LOW VOLTAGE WALL STATION WITH ON/OFF/DIM CONTROL		
RESTROOM/LOCKERROOM		N/A	AUTOMATIC OCCUPANCY ON TO 80% OR MANUAL OVERIDE ON TO 80%	AUTOMATIC OCCUPANCY OFF OR MANUAL OVERIDE OFF	20 MIN TO 10% 60 MIN TO OFF	10 MIN TO 10% 15 MIN TO OFF		LLLC FIXTURES	LOW VOLTAGE WALL STATION WITH ON/OFF/DIM CONTROL		
STAIRS		25FC	AUTOMATIC OCCUPANCY ON TO 80% OR MANUAL OVERIDE ON TO 80%	AUTOMATIC OCCUPANCY OFF	20 MIN TO 50%	10 MIN TO 10%		LLLC FIXTURES	TIED TO MASTER LOW VOLTAGE WALL STATION WITH ON/OFF CONTROL LOCATED WITH NLIGHT PANEL		
INSTRUMENT ROOM		N/A	AUTOMATIC OCCUPANCY ON TO 80% OR MANUAL OVERIDE ON TO 80%	AUTOMATIC OCCUPANCY OFF OR MANUAL OVERIDE OFF	20 MIN TO 10% 60 MIN TO OFF	10 MIN TO 10% 15 MIN TO OFF		EITHER WALLSTATION OR OVERHEAD	TYPICAL: LOW VOLTAGE COMBINATION OCCUPANCY SENSOR WALL STATION WITH ON/OFF CONTROL. CONFIRM WITH OWNER		
STORAGE		N/A	AUTOMATIC OCCUPANCY ON TO 80% OR MANUAL OVERIDE ON TO 80%	AUTOMATIC OCCUPANCY OFF OR MANUAL OVERIDE OFF	20 MIN TO 10% 60 MIN TO OFF	10 MIN TO 10% 15 MIN TO OFF		EITHER WALLSTATION OR OVERHEAD	TYPICAL: LOW VOLTAGE COMBINATION OCCUPANCY SENSOR WALL STATION WITH ON/OFF CONTROL. CONFIRM WITH OWNER		
CONFERENCE ROOM		40FC	AUTOMATIC OCCUPANCY ON TO 80% OR MANUAL OVERIDE ON TO 80%	AUTOMATIC OCCUPANCY OFF OR MANUAL OVERIDE OFF	20 MIN TO 10% 60 MIN TO OFF	10 MIN TO 10% 15 MIN TO OFF		LLLC FIXTURES	LOW VOLTAGE WALL STATION WITH ON/OFF/DIM SCENE CONTROL. WALL STATIONS TO PROVIDE BUTTONS FOR ALL ON, ALL OFF, AND SEPARATE DIMMING CONTROL OF EACH CONTROL ZONE. PROVIDE CONTROL FUNCTIONALITY TO CONTROL EACH ZONE INDEPENDENTLY. COORDINATE WITH OWNER FOR SCENE SETTINGS.		
RECEPTION		25FC	AUTOMATIC OCCUPANCY ON TO 80% OR MANUAL OVERIDE ON TO 80%	AUTOMATIC OCCUPANCY OFF OR MANUAL OVERIDE OFF	20 MIN TO 50%	10 MIN TO 10% 15 MIN TO OFF		LLLC FIXTURES	LOW VOLTAGE WALL STATION WITH ON/OFF/DIM CONTROL		
CLASSROOM, LAB, RESEARCH		50FC	AUTOMATIC OCCUPANCY ON TO 80% OR MANUAL OVERIDE ON TO 80%	AUTOMATIC OCCUPANCY OFF OR MANUAL OVERIDE OFF	20 MIN TO 50% 60 MIN TO OFF	10 MIN TO 10% 15 MIN TO OFF		LLLC FIXTURES	LOW VOLTAGE WALL STATION WITH ON/OFF/DIM SCENE CONTROL. WALL STATIONS TO PROVIDE BUTTONS FOR ALL ON, ALL OFF, AND SEPARATE DIMMING CONTROL OF EACH CONTROL ZONE. PROVIDE CONTROL FUNCTIONALITY TO CONTROL EACH ZONE INDEPENDENTLY. COORDINATE WITH OWNER FOR SCENE SETTINGS.		
OPEN OFFICE		50FC	AUTOMATIC OCCUPANCY ON TO 80% OR MANUAL OVERIDE ON TO 80%	AUTOMATIC OCCUPANCY OFF OR MANUAL OVERIDE OFF	20 MIN TO 10% 60 MIN TO OFF	10 MIN TO 10% 15 MIN TO OFF		LLLC FIXTURES	LOW VOLTAGE WALL STATION WITH ON/OFF/DIM CONTROL		
CORRIDOR		N/A	AUTOMATIC OCCUPANCY ON TO 80%	AUTOMATIC OCCUPANCY OFF	20 MIN TO 40%	10 MIN TO 10% 15 MIN TO OFF		LLLC FIXTURES	TIED TO MASTER LOW VOLTAGE WALL STATION WITH ON/OFF CONTROL LOCATED WITH NLIGHT PANEL		
LOBBY		25FC	AUTOMATIC OCCUPANCY ON TO 80%	AUTOMATIC OCCUPANCY OFF	20 MIN TO 40%	10 MIN TO 10%		LLLC FIXTURES	LOW VOLTAGE WALL STATION WITH ON/OFF/DIM CONTROL		
EXTERIOR		N/A	LIGHTS SHALL BE AUTOMATICALLY TURNED ON AT DUSK TO 100%	LIGHTS SHALL BE AUTOMATICALLY TURNED OFF AT DAWN	N/A	N/A		N/A	TIED TO MASTER LOW VOLTAGE WALL STATION WITH ON/OFF CONTROL LOCATED WITH NLIGHT PANEL		

BUSINESS HOURS 7:00AM TO 8:00PM M-F

Portland State UNIVERSITY
PSU CAPITAL PROJECTS & CONSTRUCTION

RMNC
RICHARD & MAURINE NEUBERGER CENTER

4TH FLOOR SPHR
INTERIOR REMODEL

PSU CAMPUS | BLOCK: 087
1600 SW 4TH AVENUE
PORTLAND, OREGON 97201

ISSUED FOR BID & PERMIT

REGISTERED PROFESSIONAL ENGINEER
101192PE
Joseph Wuest
OREGON
SEPT 13, 2022
JOSEPH W. WUEST
EXPIRES: 06/30/28

9/4/2026

HALF SIZE WHEN PRINTED AT 11X17

Sheet Title :

LIGHTING SOO

Revisions : *

Date : 09/04/2026

Drawn : JWW Checked : JWW

Sheet # : **E003**

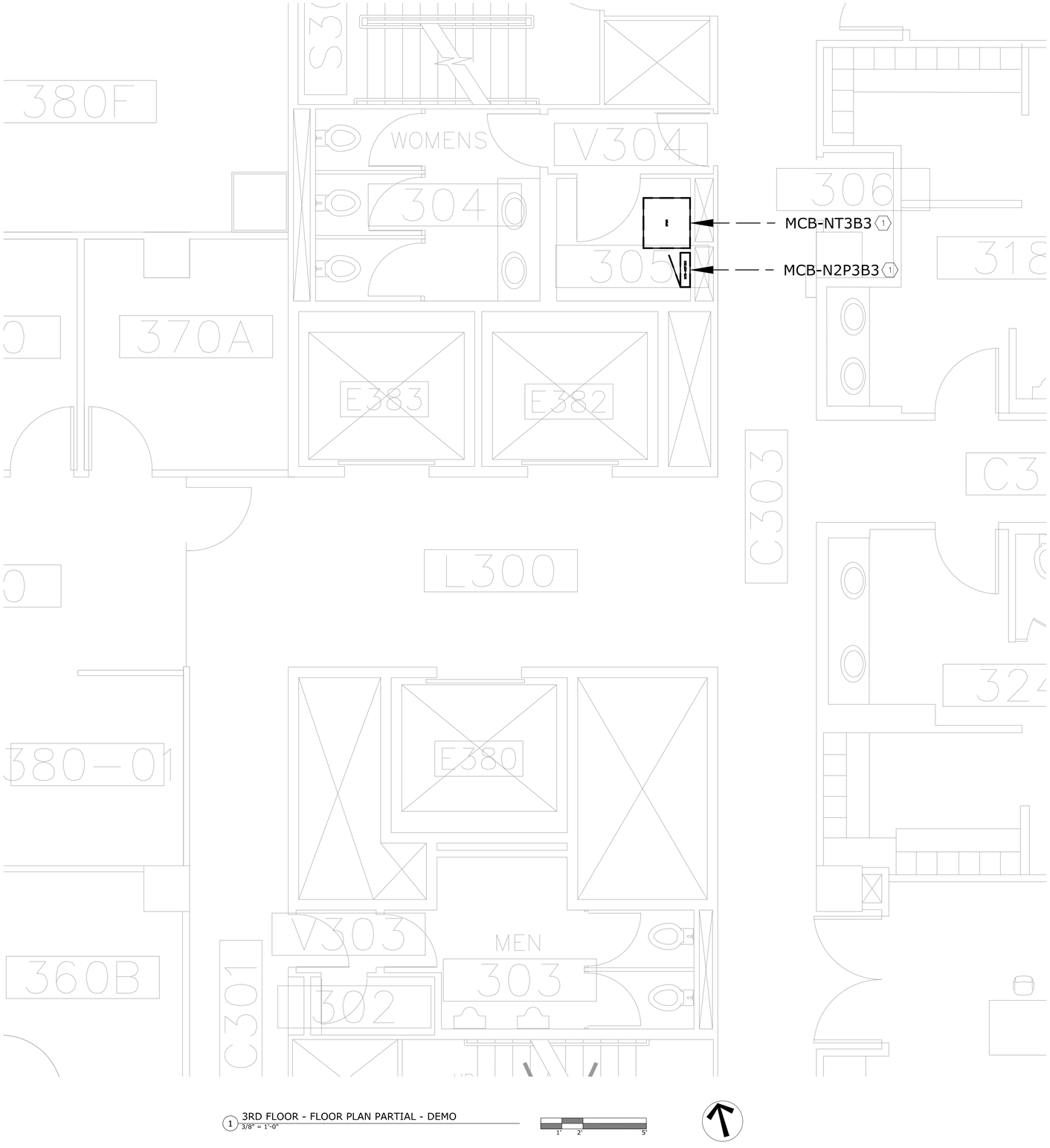

1 3RD FLOOR - FLOOR PLAN PARTIAL - DEMO
3/8" = 1'-0"

1' 2' 5'

GENERAL NOTES

1. PRIOR TO INITIATING AND PERFORMING WORK, COORDINATE CONSTRUCTION AND ANY REQUIRED OUTAGES WITH PSU.
2. ALL ELECTRICAL WORK IS TO BE COMPLETED IN ACCORDANCE WITH THE CURRENT NATIONAL ELECTRIC CODE AND ALL OTHER APPLICABLE CODES.
3. FIELD VERIFY EXISTING CONDITIONS RELATED TO SCOPE OF WORK AND NOTIFY THE ENGINEER OF ANY DISCREPANCIES THAT CHANGE THE SCOPE OF WORK.
4. ALL EQUIPMENT AND PARTS CURRENTLY EXISTING IN THE FIELD ARE TO REMAIN UNLESS OTHERWISE NOTED.
5. REFERENCE EXISTING ARCHITECTURAL DRAWINGS FOR WALL TYPES. PATCH AND PAINT AS REQUIRED TO REPAIR DAMAGE FROM WORK.
6. REFERENCE STRUCTURAL DRAWINGS FOR ALL PENETRATIONS AND SUPPORTS. SEAL ALL PENETRATIONS.
7. PROVIDE SUBMITTALS TO OWNER FOR ALL PARTS AND EQUIPMENT PRIOR TO FINALIZING ORDER.

KEYED NOTES (#)

1. ELECTRICAL CONTRACTOR TO DEMO ELECTRICAL EQUIPMENT FOR REPLACEMENT. COORDINATE WITH INSTALLATION DRAWINGS.

Portland State UNIVERSITY
PSU CAPITAL PROJECTS & CONSTRUCTION

RMNC

RICHARD & MAURINE NEUBERGER CENTER

4TH FLOOR SPHR
INTERIOR REMODEL

PSU CAMPUS | BLOCK: 087
1600 SW 4TH AVENUE
PORTLAND, OREGON 97201

ISSUED FOR BID & PERMIT

REGISTERED PROFESSIONAL ENGINEER
101192PE
Joseph Wuest
OREGON
SEPT 13, 2022
JOSEPH W. WUEST
EXPIRES: 06/30/28

9/4/2026

HALF SIZE WHEN PRINTED AT 11X17

Sheet Title :

POWER & DATA 3RD FLOOR DEMO PLAN

Revisions :	Date :
*	07/08/2026

Drawn : JWW Checked : JWW

Sheet # : **E100**



1 4TH FLOOR NORTH - FLOOR PLAN - DEMO
3/16" = 1'-0"

18" 3' 5' 10'

GENERAL NOTES

1. PRIOR TO INITIATING AND PERFORMING WORK, COORDINATE CONSTRUCTION AND ANY REQUIRED OUTAGES WITH PSU.
2. ALL ELECTRICAL WORK IS TO BE COMPLETED IN ACCORDANCE WITH THE CURRENT NATIONAL ELECTRIC CODE AND ALL OTHER APPLICABLE CODES.
3. FIELD VERIFY EXISTING CONDITIONS RELATED TO SCOPE OF WORK AND NOTIFY THE ENGINEER OF ANY DISCREPANCIES THAT CHANGE THE SCOPE OF WORK.
4. ALL EQUIPMENT AND PARTS CURRENTLY EXISTING IN THE FIELD ARE TO REMAIN UNLESS OTHERWISE NOTED.
5. REFERENCE EXISTING ARCHITECTURAL DRAWINGS FOR WALL TYPES. PATCH AND PAINT AS REQUIRED TO REPAIR DAMAGE FROM WORK.
6. REFERENCE STRUCTURAL DRAWINGS FOR ALL PENETRATIONS AND SUPPORTS. SEAL ALL PENETRATIONS.
7. PROVIDE SUBMITTALS TO OWNER FOR ALL PARTS AND EQUIPMENT PRIOR TO FINALIZING ORDER.

KEYED NOTES (#)

1. ELECTRICAL CONTRACTOR TO DEMO RECEPTACLE. DEMO RACEWAY AND CABLE BACK TO THE PANEL.
2. ELECTRICAL CONTRACTOR TO DEMO FLOORBOX AND PULL CABLE BACK TO THE PANEL.
3. POWER RECEPTACLE TO REMAIN. ELECTRICAL CONTRACTOR TO REFEED POWER.
4. ELECTRICAL CONTRACTOR TO DEMO LIGHTSWITCH AND DEMO RACEWAY AND CABLE BACK TO THE PANEL.
5. ELECTRICAL CONTRACTOR TO DEMO ELECTRICAL EQUIPMENT FOR REPLACEMENT.
6. ELECTRICAL CONTRACTOR TO DEMO ELECTRICAL EQUIPMENT FOR RELOCATION.

Portland State UNIVERSITY
PSU CAPITAL PROJECTS & CONSTRUCTION

RMNC

RICHARD & MAURINE NEUBERGER CENTER

4TH FLOOR SPHR
INTERIOR REMODEL

PSU CAMPUS | BLOCK: 087
1600 SW 4TH AVENUE
PORTLAND, OREGON 97201

ISSUED FOR BID & PERMIT

REGISTERED PROFESSIONAL ENGINEER
101192PE
Joseph Wuest
OREGON
SEPT 13, 2022
JOSEPH W. WUEST
EXPIRES: 06/30/28

9/4/2026

HALF SIZE WHEN PRINTED AT 11X17

Sheet Title :

POWER & DATA 4TH FLR NORTH DEMO PLAN

Revisions :	Date :
*	07/08/2026

Drawn : JWW Checked : JWW

Sheet # : **E101**



1 4TH FLOOR SOUTH - FLOOR PLAN - DEMO
3/16" = 1'-0"

18" 3' 5' 10'

GENERAL NOTES

1. PRIOR TO INITIATING AND PERFORMING WORK, COORDINATE CONSTRUCTION AND ANY REQUIRED OUTAGES WITH PSU.
2. ALL ELECTRICAL WORK IS TO BE COMPLETED IN ACCORDANCE WITH THE CURRENT NATIONAL ELECTRIC CODE AND ALL OTHER APPLICABLE CODES.
3. FIELD VERIFY EXISTING CONDITIONS RELATED TO SCOPE OF WORK AND NOTIFY THE ENGINEER OF ANY DISCREPANCIES THAT CHANGE THE SCOPE OF WORK.
4. ALL EQUIPMENT AND PARTS CURRENTLY EXISTING IN THE FIELD ARE TO REMAIN UNLESS OTHERWISE NOTED.
5. REFERENCE EXISTING ARCHITECTURAL DRAWINGS FOR WALL TYPES. PATCH AND PAINT AS REQUIRED TO REPAIR DAMAGE FROM WORK.
6. REFERENCE STRUCTURAL DRAWINGS FOR ALL PENETRATIONS AND SUPPORTS. SEAL ALL PENETRATIONS.
7. PROVIDE SUBMITTALS TO OWNER FOR ALL PARTS AND EQUIPMENT PRIOR TO FINALIZING ORDER.

KEYED NOTES (#)

1. ELECTRICAL CONTRACTOR TO DEMO RECEPTACLE. DEMO RACEWAY AND CABLE BACK TO THE PANEL.
2. ELECTRICAL CONTRACTOR TO DEMO LIGHTSWITCH. DEMO RACEWAY AND CABLE BACK TO THE PANEL.
3. ELECTRICAL CONTRACTOR TO DEMO ELECTRICAL EQUIPMENT FOR RELOCATION.

Portland State UNIVERSITY
PSU CAPITAL PROJECTS & CONSTRUCTION

RMNC

RICHARD & MAURINE NEUBERGER CENTER

4TH FLOOR SPHR
INTERIOR REMODEL

PSU CAMPUS | BLOCK: 087
1600 SW 4TH AVENUE
PORTLAND, OREGON 97201

ISSUED FOR BID & PERMIT

REGISTERED PROFESSIONAL ENGINEER
101192PE
Joseph Wuest
OREGON
SEPT. 13, 2022
JOSEPH W. WUEST

EXPIRES: 06/30/28

9/4/2026

HALF SIZE WHEN PRINTED AT 11X17

Sheet Title :

POWER & DATA 4TH FLR SOUTH DEMO PLAN

Revisions :	Date :
*	07/08/2026

Drawn : JWW Checked : JWW

Sheet # : **E102**

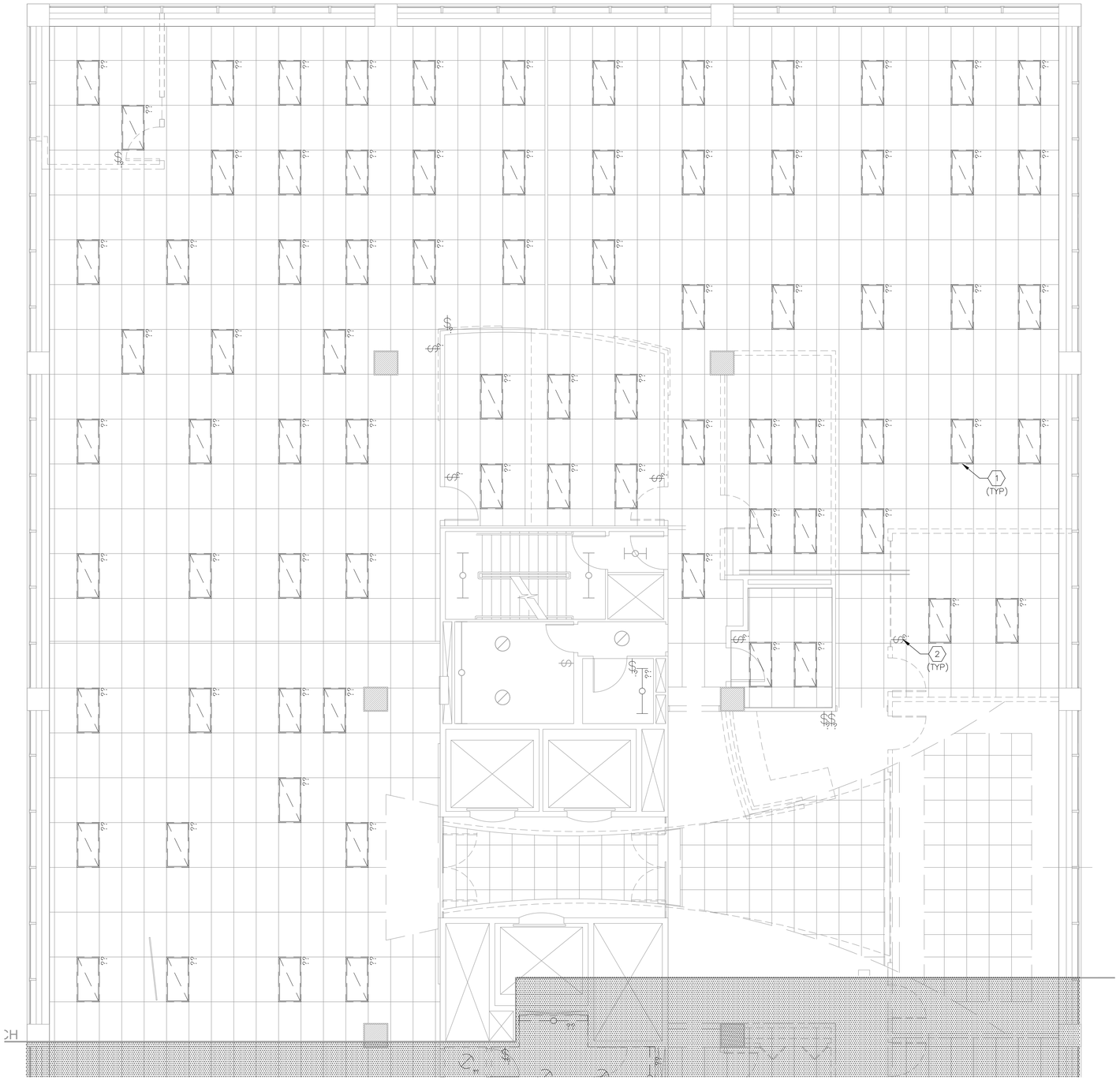

1 4TH FLOOR NORTH - CEILING PLAN - DEMO
3/16" = 1'-0"

18" 3' 5' 10'

GENERAL NOTES

1. PRIOR TO INITIATING AND PERFORMING WORK, COORDINATE CONSTRUCTION AND ANY REQUIRED OUTAGES WITH PSU.
2. ALL ELECTRICAL WORK IS TO BE COMPLETED IN ACCORDANCE WITH THE CURRENT NATIONAL ELECTRIC CODE AND ALL OTHER APPLICABLE CODES.
3. FIELD VERIFY EXISTING CONDITIONS RELATED TO SCOPE OF WORK AND NOTIFY THE ENGINEER OF ANY DISCREPANCIES THAT CHANGE THE SCOPE OF WORK.
4. ALL EQUIPMENT AND PARTS CURRENTLY EXISTING IN THE FIELD ARE TO REMAIN UNLESS OTHERWISE NOTED.
5. REFERENCE EXISTING ARCHITECTURAL DRAWINGS FOR WALL TYPES. PATCH AND PAINT AS REQUIRED TO REPAIR DAMAGE FROM WORK.
6. REFERENCE STRUCTURAL DRAWINGS FOR ALL PENETRATIONS AND SUPPORTS. SEAL ALL PENETRATIONS.
7. PROVIDE SUBMITTALS TO OWNER FOR ALL PARTS AND EQUIPMENT PRIOR TO FINALIZING ORDER.

KEYED NOTES ⟨#⟩

1. ELECTRICAL CONTRACTOR TO DEMO LIGHT FIXTURE AND ASSOCIATED WIRING BACK TO THE PANEL.
2. ELECTRICAL CONTRACTOR TO DEMO LIGHTSWITCH AND ASSOCIATED WIRING BACK TO THE PANEL.

Portland State UNIVERSITY
PSU CAPITAL PROJECTS & CONSTRUCTION

RMNC

RICHARD & MAURINE NEUBERGER CENTER

4TH FLOOR SPHR
INTERIOR REMODEL

PSU CAMPUS | BLOCK: 087
1600 SW 4TH AVENUE
PORTLAND, OREGON 97201

ISSUED FOR BID & PERMIT

REGISTERED PROFESSIONAL ENGINEER
101192PE
Joseph Wuest
OREGON
SEPT. 13, 2022
JOSEPH W. WUEST
EXPIRES: 06/30/28

9/4/2026

HALF SIZE WHEN PRINTED AT 11X17

Sheet Title :

LIGHTING 4TH FLR NORTH DEMO PLAN

Revisions :	Date :
*	07/08/2026

Drawn : JWW Checked : JWW

Sheet # : **E111**



1 4TH FLOOR SOUTH - CEILING PLAN - DEMO
3/16" = 1'-0"

18" 3' 5' 10'

GENERAL NOTES

1. PRIOR TO INITIATING AND PERFORMING WORK, COORDINATE CONSTRUCTION AND ANY REQUIRED OUTAGES WITH PSU.
2. ALL ELECTRICAL WORK IS TO BE COMPLETED IN ACCORDANCE WITH THE CURRENT NATIONAL ELECTRIC CODE AND ALL OTHER APPLICABLE CODES.
3. FIELD VERIFY EXISTING CONDITIONS RELATED TO SCOPE OF WORK AND NOTIFY THE ENGINEER OF ANY DISCREPANCIES THAT CHANGE THE SCOPE OF WORK.
4. ALL EQUIPMENT AND PARTS CURRENTLY EXISTING IN THE FIELD ARE TO REMAIN UNLESS OTHERWISE NOTED.
5. REFERENCE EXISTING ARCHITECTURAL DRAWINGS FOR WALL TYPES. PATCH AND PAINT AS REQUIRED TO REPAIR DAMAGE FROM WORK.
6. REFERENCE STRUCTURAL DRAWINGS FOR ALL PENETRATIONS AND SUPPORTS. SEAL ALL PENETRATIONS.
7. PROVIDE SUBMITTALS TO OWNER FOR ALL PARTS AND EQUIPMENT PRIOR TO FINALIZING ORDER.

KEYED NOTES (#)

1. ELECTRICAL CONTRACTOR TO DEMO LIGHT FIXTURE AND ASSOCIATED WIRING BACK TO THE PANEL.
2. ELECTRICAL CONTRACTOR TO DEMO LIGHTSWITCH AND ASSOCIATED WIRING BACK TO THE PANEL.

Portland State UNIVERSITY
PSU CAPITAL PROJECTS & CONSTRUCTION

RMNC
RICHARD & MAURINE NEUBERGER CENTER

4TH FLOOR SPHR
INTERIOR REMODEL

PSU CAMPUS | BLOCK: 087
1600 SW 4TH AVENUE
PORTLAND, OREGON 97201

ISSUED FOR BID & PERMIT

REGISTERED PROFESSIONAL ENGINEER
101192PE
Joseph Wuest
OREGON
SEPT. 13, 2022
JOSEPH W. WUEST
EXPIRES: 06/30/28

9/4/2026

HALF SIZE WHEN PRINTED AT 11X17

Sheet Title :

LIGHTING 4TH FLR SOUTH DEMO PLAN

Revisions :	Date :
*	07/08/2026

Drawn : JWW Checked : JWW

Sheet # : **E112**

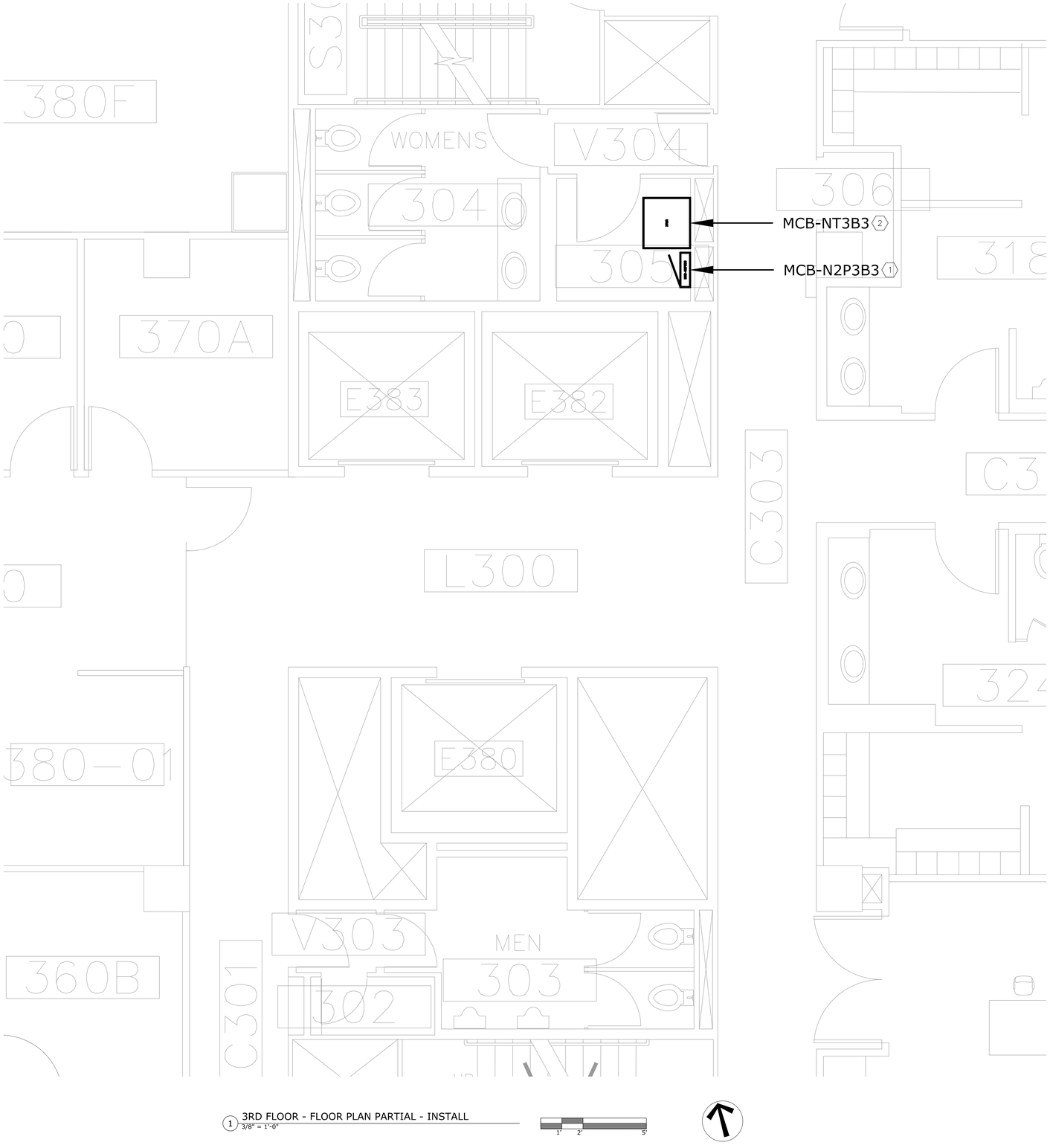

1 3RD FLOOR - FLOOR PLAN PARTIAL - INSTALL
3/8" = 1'-0"

1' 2' 5'

GENERAL NOTES

1. PRIOR TO INITIATING AND PERFORMING WORK, COORDINATE CONSTRUCTION AND ANY REQUIRED OUTAGES WITH PSU.
2. ALL ELECTRICAL WORK IS TO BE COMPLETED IN ACCORDANCE WITH THE CURRENT NATIONAL ELECTRIC CODE AND ALL OTHER APPLICABLE CODES.
3. FIELD VERIFY EXISTING CONDITIONS RELATED TO SCOPE OF WORK AND NOTIFY THE ENGINEER OF ANY DISCREPANCIES THAT CHANGE THE SCOPE OF WORK.
4. ALL EQUIPMENT AND PARTS CURRENTLY EXISTING IN THE FIELD ARE TO REMAIN UNLESS OTHERWISE NOTED.
5. REFERENCE ARCHITECTURAL DRAWINGS FOR WALL TYPES. PATCH AND PAINT AS REQUIRED TO REPAIR DAMAGE FROM WORK.
6. REFERENCE STRUCTURAL DRAWINGS FOR ALL PENETRATIONS AND SUPPORTS. SEAL ALL PENETRATIONS.
7. PROVIDE SUBMITTALS TO OWNER FOR ALL PARTS AND EQUIPMENT PRIOR TO FINALIZING ORDER.

KEYED NOTES (#)

1. ELECTRICAL CONTRACTOR TO INSTALL PREVIOUSLY DEMOED PANEL MCB-N2P4B2A. FURNISH AND INSTALL NEW BREAKERS AS NEEDED AND RELABEL. REFERENCE PANEL SCHEDULES FOR MORE INFORMATION.
2. ELECTRICAL CONTRACTOR TO FURNISH AND INSTALL NEW 480V TO 208/120V, 45KVA TRANSFORMER TO FEED PANEL MCB-N2P3B3.

Portland State UNIVERSITY
PSU CAPITAL PROJECTS & CONSTRUCTION

RMNC

RICHARD & MAURINE NEUBERGER CENTER

4TH FLOOR SPHR
INTERIOR REMODEL

PSU CAMPUS | BLOCK: 087
1600 SW 4TH AVENUE
PORTLAND, OREGON 97201

ISSUED FOR BID & PERMIT

REGISTERED PROFESSIONAL ENGINEER
101192PE
Joseph Wuest
OREGON
SEPT 13, 2022
JOSEPH W. WUEST
EXPIRES: 06/30/28

9/4/2026

HALF SIZE WHEN PRINTED AT 11X17

Sheet Title :

POWER & DATA 3RD FLOOR INSTALL PLAN

Revisions :	Date :
*	07/08/2026

Drawn : JWW Checked : JWW

Sheet # : **E200**

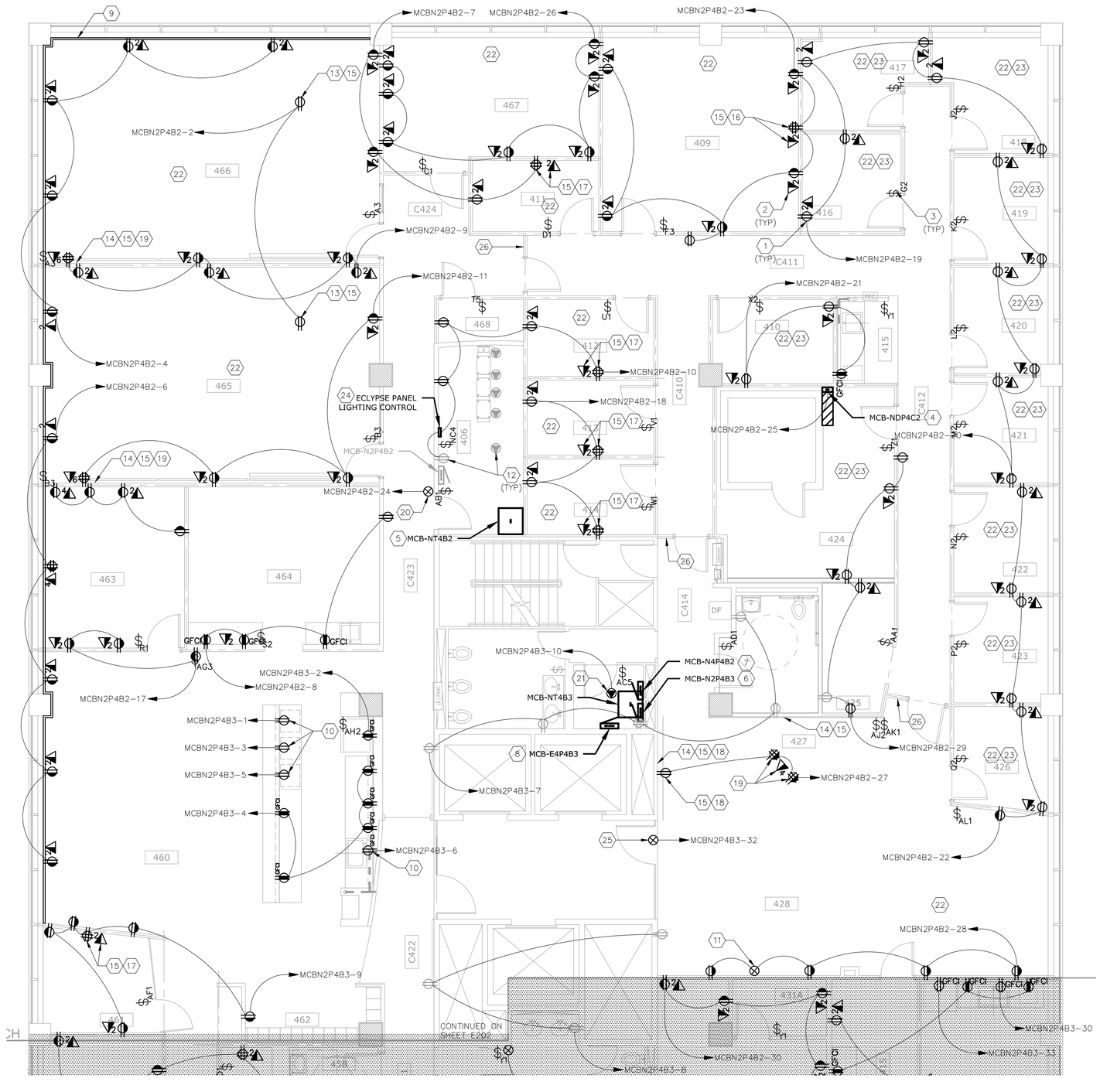

GENERAL NOTES

1. PRIOR TO INITIATING AND PERFORMING WORK, COORDINATE CONSTRUCTION AND ANY REQUIRED OUTAGES WITH PSU.
2. ALL ELECTRICAL WORK IS TO BE COMPLETED IN ACCORDANCE WITH THE CURRENT NATIONAL ELECTRIC CODE AND ALL OTHER APPLICABLE CODES.
3. FIELD VERIFY EXISTING CONDITIONS RELATED TO SCOPE OF WORK AND NOTIFY THE ENGINEER OF ANY DISCREPANCIES THAT CHANGE THE SCOPE OF WORK.
4. ALL EQUIPMENT AND PARTS CURRENTLY EXISTING IN THE FIELD ARE TO REMAIN UNLESS OTHERWISE NOTED.
5. REFERENCE ARCHITECTURAL DRAWINGS FOR WALL TYPES. PATCH AND PAINT AS REQUIRED TO REPAIR DAMAGE FROM WORK.
6. REFERENCE STRUCTURAL DRAWINGS FOR ALL PENETRATIONS AND SUPPORTS. SEAL ALL PENETRATIONS IN ALIGNMENT WITH ACOUSTICAL DESIGN.
7. PROVIDE SUBMITTALS TO OWNER FOR ALL PARTS AND EQUIPMENT PRIOR TO FINALIZING ORDER.
8. INSTALL ALL RECEPTACLES (POWER AND DATA) AND BOXES AT 18" AFF TO TOP OF BOX UNLESS OTHERWISE NOTED.
9. INSTALL ALL SWITCHES AT 42" AFF TO TOP OF BOX UNLESS OTHERWISE NOTED.

KEYED NOTES (#)

1. ELECTRICAL CONTRACTOR TO FURNISH AND INSTALL NEW POWER RECEPTACLE. REFERENCE DETAIL 1 ON E500 FOR CONTROLLED RECEPTACLES.
2. ELECTRICIAL CONTRACTOR TO FURNISH AND INSTALL 1-GANG BOX 3/4" CONDUIT THAT STUBS OUT TO ABOVE THE SUSPENDED CEILING. TELECOM CONTRACTOR TO FURNISH AND INSTALL NEW DATA RECEPTACLE AND ASSOCIATED CABLING. SUBSCRIPT NUMBER DENOTES MINIMUM NUMBER OF PHYSICAL PORTS. TELECOM CONTRACTOR TO CONFIRM NUMBER OF PORTS TO ACTIVATE WITH OWNER.
3. ELECTRICAL CONTRACTOR TO FURNISH AND INSTALL NEW LIGHTSWITCH. COORDINATE PROGRAMMING WITH NLIGHT REPRESENTATIVE AND OWNER.
4. ELECTRICAL CONTRACTOR TO FURNISH AND INSTALL A NEW, 120V, 1P, 20A DISCONNECT. HARDWIRE THE SOUND-PROOF BOOTH INTO THE DISCONNECT.
5. ELECTRICAL CONTRACTOR TO INSTALL PREVIOUSLY DEMOED TRANSFORMER TO DIRECT FEED PANEL MCB-N2P4B2B. REFERENCE PANEL SCHEDULES AND ONE-LINES FOR MORE INFORMATION.
6. ELECTRICAL CONTRACTOR TO INSTALL PREVIOUSLY DEMOED PANEL R-4-2. FURNISH AND INSTALL NEW BREAKERS AS NEEDED AND RELABEL. REFERENCE PANEL SCHEDULES AND ONE-LINES FOR MORE INFORMATION.
7. ELECTRICAL CONTRACTOR TO FURNISH AND INSTALL NEW 480/277V, 3 PHASE, 4 WIRE PANEL MCB-N4P4B2. MINIMUM RATING OF 70A WITH A MINIMUM OF 30 POLES.
8. ELECTRICAL CONTRACTOR TO FURNISH AND INSTALL NEW 480/277V, 3 PHASE, 4 WIRE PANEL MCB-E4P4B3. MINIMUM RATING OF 40A WITH A MINIMUM OF 30 POLES.
9. ELECTRICAL CONTRACTOR TO FURNISH AND INSTALL NEW WIREMOLD.
10. INSTALL UNDER COUNTER.
11. ELECTRICAL CONTRACTOR TO PROVIDE DIRECT CONNECTION TO LED STRIP LIGHTING SYSTEM OF ACCENT WALL. COORDINATE CONNECTION AND DUPLEXES IN THE AREA WITH ARCHITECTURAL.
12. EXISTING POWER RECEPTACLE. ELECTRICAL CONTRACTOR TO REFEED AS NECESSARY.
13. MOUNTED IN SUSPENDED CEILING.
14. ELECTRICAL CONTRACTOR TO INSTALL 1-GANG BOX WITH 1" CONDUIT THAT STUBS OUT ABOVE THE SUSPENDED CEILING.
15. CONFIRM EXACT LOCATION WITH A/V.
16. MOUNT AT 5' AFF TO CENTER.
17. MOUNT AT 4' AFF TO CENTER.
18. MOUNT AT 5' 6" AFF TO CENTER.
19. RECEPTACLES TO BE MOUNTED UNDER THE DESK AND FED FROM WALL VIA ENCLOSED RACEWAY. CONFIRM EXACT LOCATION WITH ARCHITECTURAL.
20. ELECTRICAL CONTRACTOR TO PROVIDE DIRECT CONNECTION TO CONDENSATE PUMP ABOVE THE CEILING. COORDINATE WITH MECHANICAL.
21. ELECTRICAL CONTRACTOR TO PROVIDE DIRECT CONNECTION TO TERMINAL UNITS TRANSFORMER. COORDINATE WITH MECHANICAL.
22. RECEPTACLES IN THIS ROOM ARE REQUIRED TO BE TAMPER-RESISTANT.
23. ELECTRICAL CONTRACTOR TO FURNISH AND INSTALL A 1-GANG BOX WITH 1" CONDUIT THAT STUBS OUT ABOVE THE SUSPENDED CEILING FOR CAMERA INSTALLATION. COORDINATE WITH OWNER FOR EXACT LOCATION.
24. ELECTRICAL CONTRACTOR TO FURNISH AND INSTALL ECLYPSE LIGHTING CONTROL PANEL. COORDINATE WITH LIGHTING CONTROLS VENDOR AND TELECOM COORDINATOR FOR EXACT LOCATIONS AND CONNECTIONS.
25. ELECTRICAL CONTRACTOR TO PROVIDE POWER FOR NEW ADA COMPLIANT AUTO-OPENER.
26. ELECTRICAL CONTRACTOR TO PREP DOOR FOR FUTURE CARD READER WITH A 1-GANG BOX AND 3/4" CONDUIT TO ABOVE THE SUSPENDED CEILING. COORDINATE EXACT LOCATION OF BOX WITH ARCHITECTURAL AND ACCESS CONTROL CONTRACTOR.
27. ELECTRICAL CONTRACTOR TO FURNISH AND INSTALL NEW 480V TO 208/120V, 45KVA TRANSFORMER TO FEED PANEL MCB-N2P4B3.

Portland State UNIVERSITY
PSU CAPITAL PROJECTS & CONSTRUCTION

RMNC

RICHARD & MAURINE NEUBERGER CENTER

4TH FLOOR SPHR
INTERIOR REMODEL

PSU CAMPUS | BLOCK: 087
1600 SW 4TH AVENUE
PORTLAND, OREGON 97201

ISSUED FOR BID & PERMIT

REGISTERED PROFESSIONAL ENGINEER
101192PE
Joseph Wuest
OREGON
SEPT. 13, 2021
JOSEPH W. WUEST
EXPIRES: 06/30/28

9/4/2026

HALF SIZE WHEN PRINTED AT 11X17

Sheet Title :

POWER & DATA 4TH FLR NORTH INSTALL PLAN

Revisions :	Date :
*	07/08/2026

Drawn : JWW Checked : JWW

Sheet # : **E201**

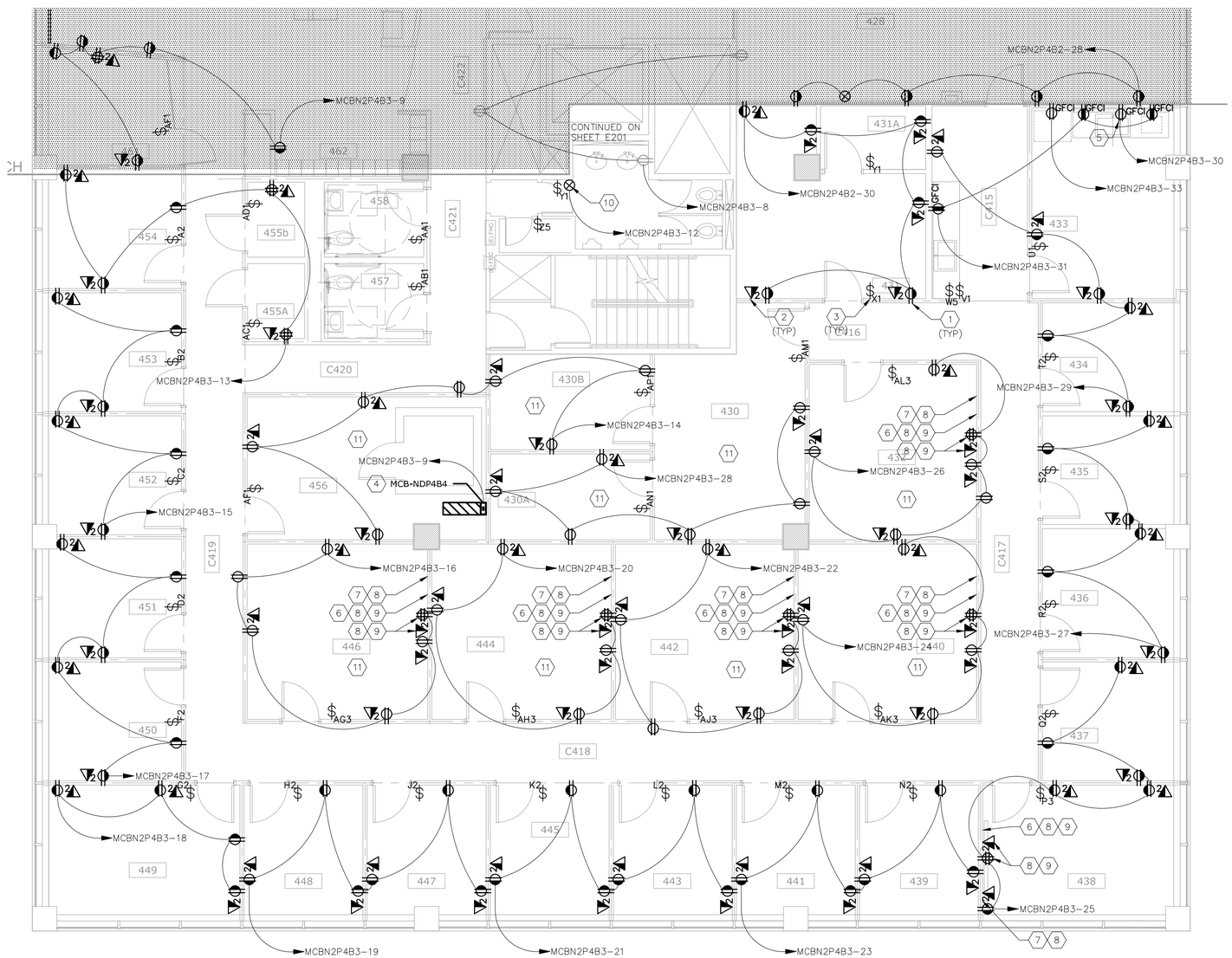

1 4TH FLOOR SOUTH - FLOOR PLAN - INSTALL
3/16" = 1'-0"

18" 3' 5' 10'

GENERAL NOTES

1. PRIOR TO INITIATING AND PERFORMING WORK, COORDINATE CONSTRUCTION AND ANY REQUIRED OUTAGES WITH PSU.
2. ALL ELECTRICAL WORK IS TO BE COMPLETED IN ACCORDANCE WITH THE CURRENT NATIONAL ELECTRIC CODE AND ALL OTHER APPLICABLE CODES.
3. FIELD VERIFY EXISTING CONDITIONS RELATED TO SCOPE OF WORK AND NOTIFY THE ENGINEER OF ANY DISCREPANCIES THAT CHANGE THE SCOPE OF WORK.
4. ALL EQUIPMENT AND PARTS CURRENTLY EXISTING IN THE FIELD ARE TO REMAIN UNLESS OTHERWISE NOTED.
5. REFERENCE ARCHITECTURAL DRAWINGS FOR WALL TYPES. PATCH AND PAINT AS REQUIRED TO REPAIR DAMAGE FROM WORK.
6. REFERENCE STRUCTURAL DRAWINGS FOR ALL PENETRATIONS AND SUPPORTS. SEAL ALL PENETRATIONS IN ALIGNMENT WITH ACOUSTICAL DESIGN.
7. PROVIDE SUBMITTALS TO OWNER FOR ALL PARTS AND EQUIPMENT PRIOR TO FINALIZING ORDER.
8. INSTALL ALL RECEPTACLES (POWER AND DATA) AND BOXES AT 18" AFF TO TOP OF BOX UNLESS OTHERWISE NOTED.
9. INSTALL ALL SWITCHES AT 42" AFF TO TOP OF BOX UNLESS OTHERWISE NOTED.

KEYED NOTES (#)

1. ELECTRICAL CONTRACTOR TO FURNISH AND INSTALL NEW POWER RECEPTACLE. REFERENCE DETAIL 1 ON E500 FOR CONTROLLED RECEPTACLES.
2. ELECTRICIAL CONTRACTOR TO FURNISH AND INSTALL 1-GANG BOX 3/4" CONDUIT THAT STUBS OUT TO ABOVE THE SUSPENDED CEILING.
   TELECOM CONTRACTOR TO FURNISH AND INSTALL NEW DATA RECEPTACLE AND ASSOCIATED CABLING. SUBSCRIPT NUMBER DENOTES MINIMUM NUMBER OF PHYSICAL PORTS. TELECOM CONTRACTOR TO CONFIRM NUMBER OF PORTS TO ACTIVATE WITH OWNER.
3. ELECTRICAL CONTRACTOR TO FURNISH AND INSTALL NEW LIGHTSWITCH. COORDINATE PROGRAMMING WITH NLIGHT REPRESENTATIVE AND OWNER.
4. ELECTRICAL CONTRACTOR TO FURNISH AND INSTALL A NEW, 120V, 1P, 20A DISCONNECT. HARDWIRE THE SOUND-PROOF BOOTH INTO THE DISCONNECT.
5. INSTALL UNDER COUNTER.
6. ELECTRICAL CONTRACTOR TO INSTALL 1-GANG BOX WITH 1" CONDUIT THAT STUBS OUT ABOVE THE SUSPENDED CEILING.
7. ELECTRICAL CONTRACTOR TO INSTALL 3-GANG BOX WITH 1" CONDUIT THAT STUBS OUT ABOVE THE SUSPENDED CEILING. MOUNT AT SWITCH HEIGHT.
8. CONFIRM EXACT LOCATION WITH A/V.
9. MOUNT AT 5' AFF TO CENTER.
10. ELECTRICAL CONTRACTOR TO PROVIDE DIRECT CONNECTION TO FIRE SMOKE DAMPER. COORDINATE WITH MECHANICAL.
11. RECEPTACLES IN THIS ROOM ARE REQUIRED TO BE TAMPER-RESISTANT.

Portland State UNIVERSITY
PSU CAPITAL PROJECTS & CONSTRUCTION

RMNC
RICHARD & MAURINE NEUBERGER CENTER

4TH FLOOR SPHR
INTERIOR REMODEL

PSU CAMPUS | BLOCK: 087
1600 SW 4TH AVENUE
PORTLAND, OREGON 97201

ISSUED FOR BID & PERMIT

REGISTERED PROFESSIONAL ENGINEER
101192PE
Joseph Wuest
OREGON
SEPT 13, 2021
JOSEPH W. WUEST
EXPIRES: 06/30/28

9/4/2026

HALF SIZE WHEN PRINTED AT 11X17

Sheet Title :

POWER & DATA 4TH FLR SOUTH INSTALL PLAN

Revisions :	Date :
*	07/08/2026

Drawn : JWW Checked : JWW

Sheet # : **E202**

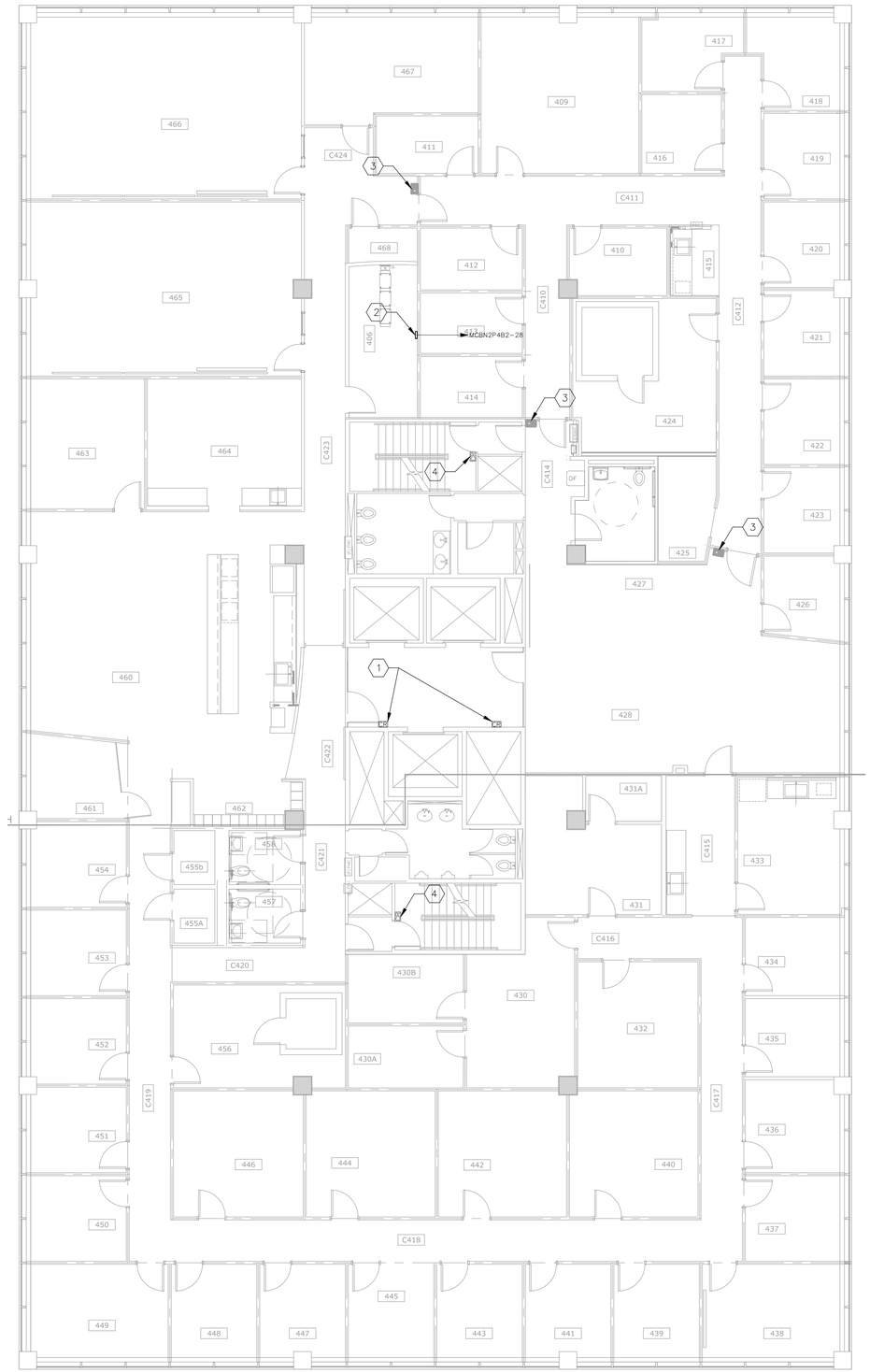

1 4TH FLOOR - FLOOR PLAN - INSTALL
1/8" = 1'-0"

2' 4' 8' 16'

GENERAL NOTES

1. PRIOR TO INITIATING AND PERFORMING WORK, COORDINATE CONSTRUCTION AND ANY REQUIRED OUTAGES WITH PSU.
2. ALL ELECTRICAL WORK IS TO BE COMPLETED IN ACCORDANCE WITH THE CURRENT NATIONAL ELECTRIC CODE AND ALL OTHER APPLICABLE CODES.
3. FIELD VERIFY EXISTING CONDITIONS RELATED TO SCOPE OF WORK AND NOTIFY THE ENGINEER OF ANY DISCREPANCIES THAT CHANGE THE SCOPE OF WORK.
4. ALL EQUIPMENT AND PARTS CURRENTLY EXISTING IN THE FIELD ARE TO REMAIN UNLESS OTHERWISE NOTED.
5. REFERENCE ARCHITECTURAL DRAWINGS FOR WALL TYPES. PATCH AND PAINT AS REQUIRED TO REPAIR DAMAGE FROM WORK.
6. REFERENCE STRUCTURAL DRAWINGS FOR ALL PENETRATIONS AND SUPPORTS. SEAL ALL PENETRATIONS IN ALIGNMENT WITH ACOUSTICAL DESIGN.
7. PROVIDE SUBMITTALS TO OWNER FOR ALL PARTS AND EQUIPMENT PRIOR TO FINALIZING ORDER.
8. INSTALL ALL RECEPTACLES (POWER AND DATA) AND BOXES AT 18" AFF TO TOP OF BOX UNLESS OTHERWISE NOTED.
9. INSTALL ALL SWITCHES AT 42" AFF TO TOP OF BOX UNLESS OTHERWISE NOTED.

KEYED NOTES (#)

1. ACCESS CONTROL CONTRACTOR TO FURNISH AND INSTALL NEW CARD READER. COORDINATE EXACT LOCATION WITH ARCHITECT.
2. ACCESS CONTROL CONTRACTOR TO FURNISH AND INSTALL NEW ACCESS CONTROL PANEL AND ASSOCIATED BOARDS.
3. FUTURE CARD READER LOCATIONS. ACCESS CONTROL CONTRACTOR TO COORDINATE WITH ELECTRICAL CONTRACTOR AND ARCHITECT TO PREPARE AREA FOR FUTURE INSTALL.
4. EXISTING CARD READER. ACCESS CONTROL CONTRACTOR TO ENSURE FUNCTIONALITY REMAINS.

Portland State UNIVERSITY
PSU CAPITAL PROJECTS & CONSTRUCTION

RMNC

RICHARD & MAURINE NEUBERGER CENTER

4TH FLOOR SPHR
INTERIOR REMODEL

PSU CAMPUS | BLOCK: 087
1600 SW 4TH AVENUE
PORTLAND, OREGON 97201

ISSUED FOR BID & PERMIT

REGISTERED PROFESSIONAL ENGINEER
101192PE
Joseph Wuest
OREGON
SEPT 13, 2022
JOSEPH W. WUEST
EXPIRES: 06/30/28

9/4/2026

HALF SIZE WHEN PRINTED AT 11X17

Sheet Title :

ACCESS CONTROL 4TH FLOOR

Revisions :	Date :
*	09/04/2026

Drawn : JWW Checked : JWW

Sheet # : **E203**

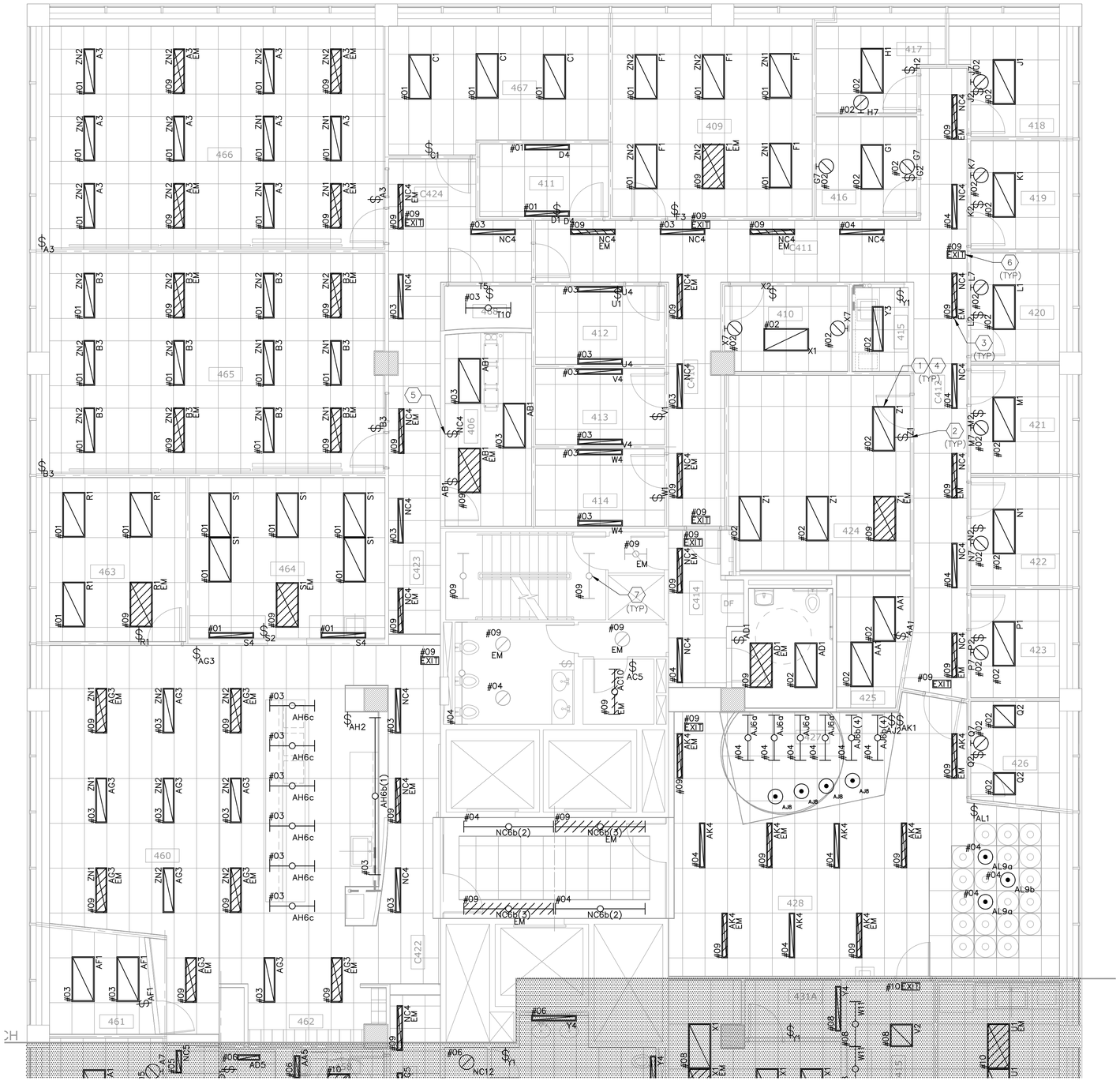

1 4TH FLOOR NORTH - CEILING PLAN - INSTALL
3/16" = 1'-0"

18" 3' 5' 10'

GENERAL NOTES

1. PRIOR TO INITIATING AND PERFORMING WORK, COORDINATE CONSTRUCTION AND ANY REQUIRED OUTAGES WITH PSU.
2. ALL ELECTRICAL WORK IS TO BE COMPLETED IN ACCORDANCE WITH THE CURRENT NATIONAL ELECTRIC CODE AND ALL OTHER APPLICABLE CODES.
3. FIELD VERIFY EXISTING CONDITIONS RELATED TO SCOPE OF WORK AND NOTIFY THE ENGINEER OF ANY DISCREPANCIES THAT CHANGE THE SCOPE OF WORK.
4. ALL EQUIPMENT AND PARTS CURRENTLY EXISTING IN THE FIELD ARE TO REMAIN UNLESS OTHERWISE NOTED.
5. REFERENCE ARCHITECTURAL DRAWINGS FOR WALL TYPES. PATCH AND PAINT AS REQUIRED TO REPAIR DAMAGE FROM WORK.
6. REFERENCE STRUCTURAL DRAWINGS FOR ALL PENETRATIONS AND SUPPORTS. SEAL ALL PENETRATIONS.
7. PROVIDE SUBMITTALS TO OWNER FOR ALL PARTS AND EQUIPMENT PRIOR TO FINALIZING ORDER.

KEYED NOTES (#)

1. ELECTRICAL CONTRACTOR TO FURNISH AND INSTALL NEW LIGHT FIXTURE. REFERENCE SPECIFICATIONS FOR TYPES. COORDINATE WITH LIGHTING CONTROLS. COORDINATE WITH ARCHITECTURAL FOR ANY FINISHES AND LENGTHS.
2. ELECTRICAL CONTRACTOR TO FURNISH AND INSTALL NEW LIGHTSWITCH. INSTALL AT 42" TO TOP OF BOX AFF UNLESS OTHERWISE NOTED. COORDINATE PROGRAMMING WITH NLIGHT REPRESENTATIVE AND OWNER.
3. EMERGENCY LIGHTING CIRCUITS ON THIS DRAWING FED FROM PANEL MCBE4P4B3, CIRCUIT 09.
4. NORMAL LIGHTING CIRCUITS ON THIS FLOOR ARE FED FROM PANEL MCBN4P4B2, CIRCUITS 01, 02, 03, 04.
5. MASTER LIGHTING CONTROL SWITCH FOR ALL LIGHT FIXTURES ON FLOOR WITHOUT LOCAL CONTROL.
6. ELECTRICAL CONTRACTOR TO FURNISH AND INSTALL EXIT SIGNS. REFERENCE SPECIFICATIONS FOR TYPES. COORDINATE WITH ARCHITECTURAL FOR EXACT LOCATIONS.
7. ELECTRICAL CONTRACTOR TO REFEED EXISTING LIGHTING FIXTURES AS NEEDED.

Portland State UNIVERSITY
PSU CAPITAL PROJECTS & CONSTRUCTION

RMNC

RICHARD & MAURINE NEUBERGER CENTER

4TH FLOOR SPHR
INTERIOR REMODEL

PSU CAMPUS | BLOCK: 087
1600 SW 4TH AVENUE
PORTLAND, OREGON 97201

ISSUED FOR BID & PERMIT

REGISTERED PROFESSIONAL ENGINEER
101192PE
Joseph Wuest
OREGON
SEPT. 13, 2022
JOSEPH W. WUEST
EXPIRES: 06/30/28

9/4/2026

HALF SIZE WHEN PRINTED AT 11X17

Sheet Title :

LIGHTING
4TH FLR NORTH
INSTALL PLAN

Revisions :	Date :
*	07/08/2026

Drawn : JWW Checked : JWW

Sheet # : **E211**



1 4TH FLOOR SOUTH - CEILING PLAN - INSTALL
3/16" = 1'-0"

18" 3' 5' 10'

GENERAL NOTES

1. PRIOR TO INITIATING AND PERFORMING WORK, COORDINATE CONSTRUCTION AND ANY REQUIRED OUTAGES WITH PSU.
2. ALL ELECTRICAL WORK IS TO BE COMPLETED IN ACCORDANCE WITH THE CURRENT NATIONAL ELECTRIC CODE AND ALL OTHER APPLICABLE CODES.
3. FIELD VERIFY EXISTING CONDITIONS RELATED TO SCOPE OF WORK AND NOTIFY THE ENGINEER OF ANY DISCREPANCIES THAT CHANGE THE SCOPE OF WORK.
4. ALL EQUIPMENT AND PARTS CURRENTLY EXISTING IN THE FIELD ARE TO REMAIN UNLESS OTHERWISE NOTED.
5. REFERENCE ARCHITECTURAL DRAWINGS FOR WALL TYPES. PATCH AND PAINT AS REQUIRED TO REPAIR DAMAGE FROM WORK.
6. REFERENCE STRUCTURAL DRAWINGS FOR ALL PENETRATIONS AND SUPPORTS. SEAL ALL PENETRATIONS.
7. PROVIDE SUBMITTALS TO OWNER FOR ALL PARTS AND EQUIPMENT PRIOR TO FINALIZING ORDER.

KEYED NOTES (#)

1. ELECTRICAL CONTRACTOR TO FURNISH AND INSTALL NEW LIGHT FIXTURE. REFERENCE SPECIFICATIONS FOR TYPES. COORDINATE WITH LIGHTING CONTROLS. COORDINATE WITH ARCHITECTURAL FOR ANY FINISHES AND LENGTHS.
2. ELECTRICAL CONTRACTOR TO FURNISH AND INSTALL NEW LIGHTSWITCH. INSTALL AT 42" TO TOP OF BOX AFF UNLESS OTHERWISE NOTED. COORDINATE PROGRAMMING WITH NLIGHT REPRESENTATIVE AND OWNER.
3. EMERGENCY LIGHTING CIRCUITS ON THIS DRAWING FED FROM PANEL MCBE4P4B3, CIRCUIT 10.
4. NORMAL LIGHTING CIRCUITS ON THIS FLOOR ARE FED FROM PANEL MCBN4P4B2, CIRCUITS 05, 06, 07, 08.
5. ELECTRICAL CONTRACTOR TO FURNISH AND INSTALL EXIT SIGNS. REFERENCE SPECIFICATIONS FOR TYPES. COORDINATE WITH ARCHITECTURAL FOR EXACT LOCATIONS.
6. ELECTRICAL CONTRACTOR TO REFEED EXISTING LIGHTING FIXTURES AS NEEDED.

Portland State UNIVERSITY
PSU CAPITAL PROJECTS & CONSTRUCTION

RMNC
RICHARD & MAURINE NEUBERGER CENTER

4TH FLOOR SPHR
INTERIOR REMODEL

PSU CAMPUS | BLOCK: 087
1600 SW 4TH AVENUE
PORTLAND, OREGON 97201

ISSUED FOR BID & PERMIT

REGISTERED PROFESSIONAL ENGINEER
101192PE
Joseph Wuest
OREGON
SEPT 13, 2022
JOSEPH W. WUEST
EXPIRES: 06/30/28

9/4/2026

HALF SIZE WHEN PRINTED AT 11X17

Sheet Title :

LIGHTING
4TH FLR SOUTH
INSTALL PLAN

Revisions :	Date :
*	07/08/2026

Drawn : JWW Checked : JWW

Sheet # : **E212**

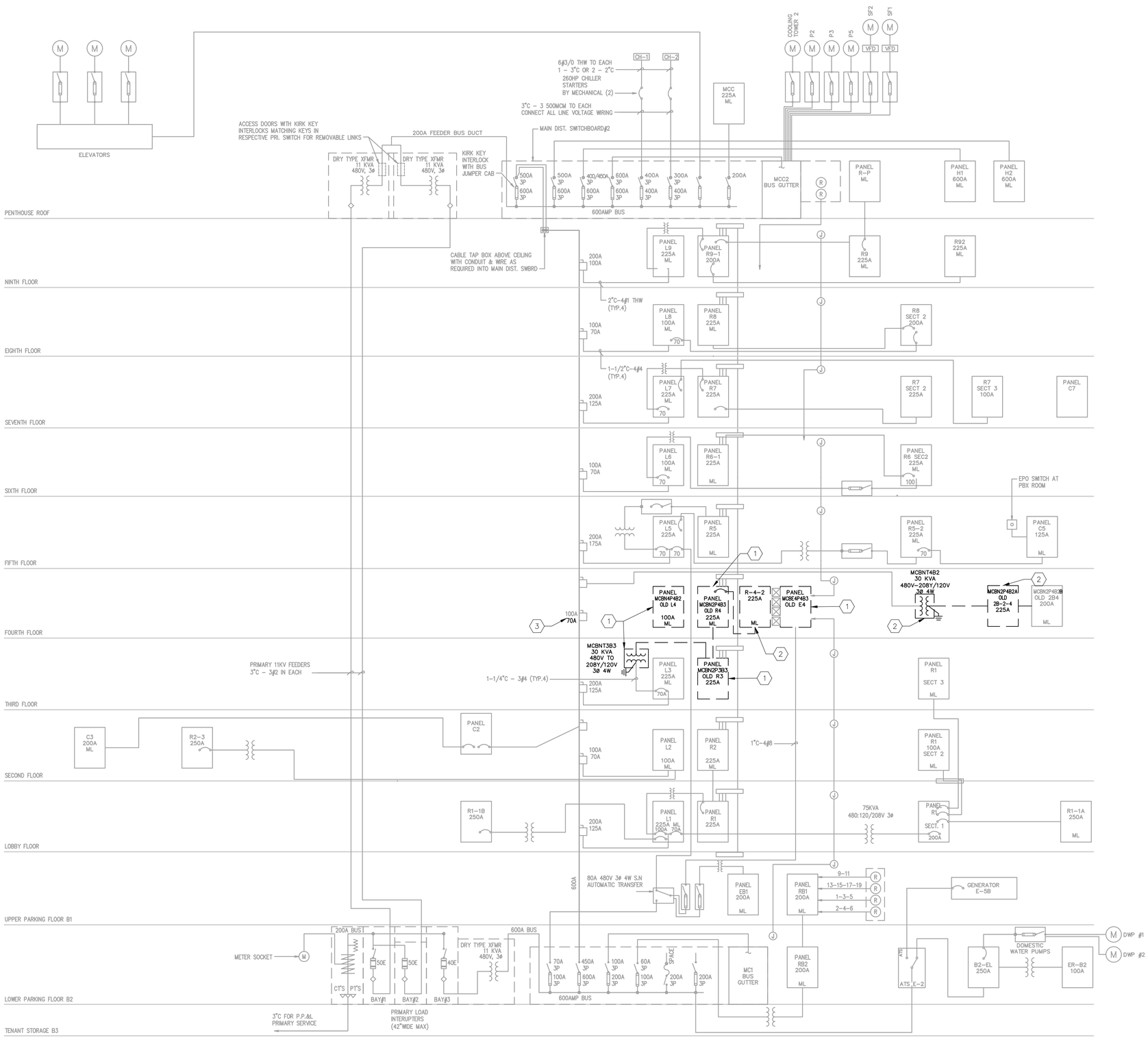

GENERAL NOTES

1. PRIOR TO INITIATING AND PERFORMING WORK, COORDINATE CONSTRUCTION AND ANY REQUIRED OUTAGES WITH PSU.
2. ALL ELECTRICAL WORK IS TO BE COMPLETED IN ACCORDANCE WITH THE CURRENT NATIONAL ELECTRIC CODE AND ALL OTHER APPLICABLE CODES.
3. FIELD VERIFY EXISTING CONDITIONS RELATED TO SCOPE OF WORK AND NOTIFY THE ENGINEER OF ANY DISCREPANCIES THAT CHANGE THE SCOPE OF WORK.
4. ALL EQUIPMENT AND PARTS CURRENTLY EXISTING IN THE FIELD ARE TO REMAIN UNLESS OTHERWISE NOTED.
5. REFERENCE EXISTING ARCHITECTURAL DRAWINGS FOR WALL TYPES. PATCH AND PAINT AS REQUIRED TO REPAIR DAMAGE FROM WORK.
6. REFERENCE STRUCTURAL DRAWINGS FOR ALL PENETRATIONS AND SUPPORTS. SEAL ALL PENETRATIONS.
7. PROVIDE SUBMITTALS TO OWNER FOR ALL PARTS AND EQUIPMENT PRIOR TO FINALIZING ORDER.

KEYED NOTES ⟨#⟩

1. ELECTRICAL CONTRACTOR TO DEMO EQUIPMENT FOR REPLACMENT. REFERENCE PLAN DRAWINGS AND PANEL SCHEDULES.
2. ELECTRICAL CONTRACTOR TO DEMO EQUIPMENT FOR RELOCATION AND REUSE. REFERENCE PLAN DRAWINGS AND PANEL SCHEDULES.
3. ELECTRICAL CONTRACTOR TO DEMO EXISTING 70A FUSES FOR REPLACEMENT.

Portland State UNIVERSITY

PSU CAPITAL PROJECTS & CONSTRUCTION

RMNC

RICHARD & MAURINE NEUBERGER CENTER

4TH FLOOR SPHR
INTERIOR REMODEL

PSU CAMPUS | BLOCK: 087
1600 SW 4TH AVENUE
PORTLAND, OREGON 97201

ISSUED FOR BID & PERMIT

REGISTERED PROFESSIONAL ENGINEER
101192PE
Joseph Wuest
OREGON
SEPT. 13, 2022
JOSEPH W. WUEST

EXPIRES: 06/30/28

9/4/2026

HALF SIZE WHEN PRINTED AT 11X17

Sheet Title :

ONE-LINE DIAGRAM DEMO

Revisions :	Date :
*	07/08/2026

Drawn : JWW Checked : JWW

Sheet # :

E300

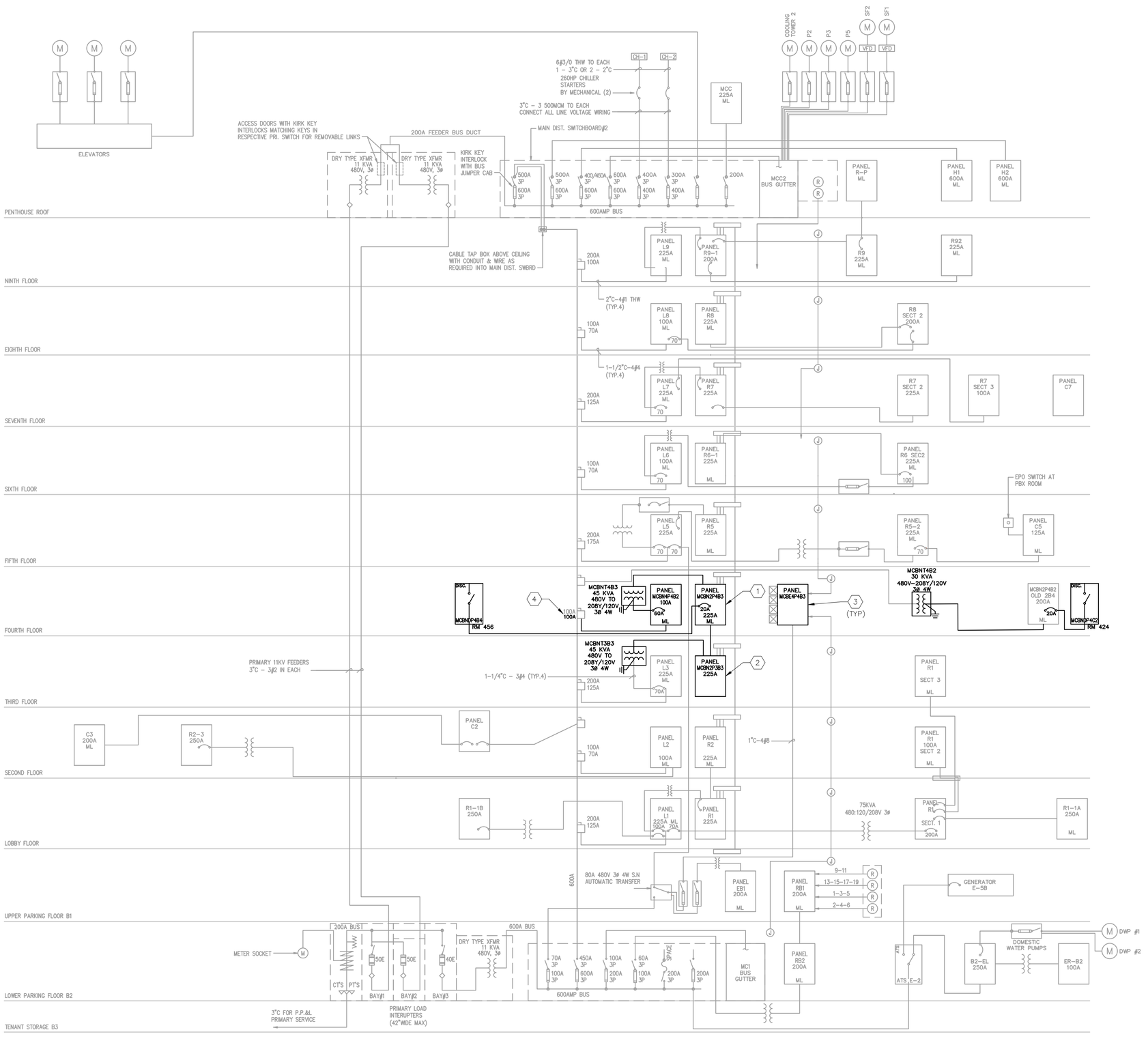

GENERAL NOTES

1. PRIOR TO INITIATING AND PERFORMING WORK, COORDINATE CONSTRUCTION AND ANY REQUIRED OUTAGES WITH PSU.
2. ALL ELECTRICAL WORK IS TO BE COMPLETED IN ACCORDANCE WITH THE CURRENT NATIONAL ELECTRIC CODE AND ALL OTHER APPLICABLE CODES.
3. FIELD VERIFY EXISTING CONDITIONS RELATED TO SCOPE OF WORK AND NOTIFY THE ENGINEER OF ANY DISCREPANCIES THAT CHANGE THE SCOPE OF WORK.
4. ALL EQUIPMENT AND PARTS CURRENTLY EXISTING IN THE FIELD ARE TO REMAIN UNLESS OTHERWISE NOTED.
5. REFERENCE EXISTING ARCHITECTURAL DRAWINGS FOR WALL TYPES. PATCH AND PAINT AS REQUIRED TO REPAIR DAMAGE FROM WORK.
6. REFERENCE STRUCTURAL DRAWINGS FOR ALL PENETRATIONS AND SUPPORTS. SEAL ALL PENETRATIONS.
7. PROVIDE SUBMITTALS TO OWNER FOR ALL PARTS AND EQUIPMENT PRIOR TO FINALIZING ORDER.

KEYED NOTES

1. ELECTRICAL CONTRACTOR TO INSTALL PREVIOUSLY DEMOED PANEL R-4-2. REFERENCE PANEL AND EQUIPMENT SCHEDULES FOR MORE INFORMATION.
2. ELECTRICAL CONTRACTOR TO INSTALL PREVIOUSLY DEMOED PANEL MCBN2P4B2A. REFERENCE PANEL AND EQUIPMENT SCHEDULES FOR MORE INFORMATION.
3. OWNER TO PROVIDE ARCFLASH CALCULATIONS AND LABELS VIA 3RD PARTY CONSULTANT FOR, AT MINIMUM, ALL NEW EQUIPMENT ON THIS SHEET.
4. ELECTRICAL CONTRACTOR TO FURNISH AND INSTALL NEW 100A FUSES.

Portland State UNIVERSITY

PSU CAPITAL PROJECTS & CONSTRUCTION

RMNC

RICHARD & MAURINE NEUBERGER CENTER

4TH FLOOR SPHR
INTERIOR REMODEL

PSU CAMPUS | BLOCK: 087
1600 SW 4TH AVENUE
PORTLAND, OREGON 97201

ISSUED FOR BID & PERMIT

REGISTERED PROFESSIONAL ENGINEER
101192PE
Joseph Wuest
OREGON
SEPT. 13, 2022
JOSEPH W. WUEST

EXPIRES: 06/30/28

9/4/2026

HALF SIZE WHEN PRINTED AT 11X17

Sheet Title :

ONE-LINE DIAGRAM INSTALL

Revisions :	Date :
*	07/08/2026

Drawn : JWW Checked : JWW

Sheet # :

E301

PANEL: MCB-N2P3B3

VOLTS: 208 | PHASE: 3 | INTEGRAL TVSS: NO | BUILDING: RMNC
MOUNTING: SURFACE | WIRE: 4 | ISOL GROUND BUS: NO | LOCATION: RM 305
BUS AMPS: 225 | MLO: YES | FEED-THRU LUGS: NO | POWER SOURCE: NORMAL
MAIN AMPS: 80 | MAIN BREAKER: NO | DOUBLE-LUGS: NO | SUPPLY FROM: MCBNT3B3
KAIC RATING: 22 | OCP TYPE: 80% BREAKER

CKT	POLE	AMP	DESCRIPTION	TYPE	A		B		C		TYPE	DESCRIPTION	AMP	POLE	CKT
1	1	20	LOBBY CANS & BATH RECPS									CLASS RECPS	20	1	2
3	1	20	GEN RECPS									CLASS RECPS	20	1	4
5	1	20	LOCKER RM RCPS									CLASS RECPS	20	1	6
7	1	20	SE OFFICE RECPS									CLASS RECPS	20	1	8
9	1	20	SE OFFICE RECPS									FAX/PRINTER RECPS	20	1	10
11	1	20	SE OFFICE RECPS									COPIER RECPS	20	1	12
13	2	20	MICROWAVE									GENERAL RECPS	20	1	14
15	2	20	MICROWAVE									VENDING MACHINE	20	1	16
17	2	20	MICROWAVE									VENDING MACHINE	20	1	18
19	2	20	MICROWAVE									VENDING MACHINE	20	1	20
21	2	20	MICROWAVE									VENDING MACHINE	20	1	22
23	2	20	MICROWAVE									TRAINING RM FLOOR PEDS	20	1	24
25	1	20	VENDING MACHINE									TRAINING RM FLOOR PEDS	20	1	26
27	1	20	VENDING MACHINE									TRAINING RM FLOOR PEDS	20	1	28
29	1	20	VENDING MACHINE									CONFERENCE RM FLOOR PEDS	20	1	30
31	1	30	ICE MACHINE									TRAINING RM FLOOR PEDS	20	1	32
33	1	20	EXERCISE RM									POWER POLE SOUTH END	20	1	34
35	1	20	ELECTRIC RM RECPS									FIRE ALARM STROBE PANEL	20	1	36
37												MAIN	80	3	38
39												MAIN	80	3	40
41												MAIN	80	3	42
					0.00 KVA		0.00 KVA		0.00 KVA						
					0.00 A		0.00 A		0.00 A						
					#DIV/0!		#DIV/0!		#DIV/0!						

SPECIAL PANEL FEATURES

CIRCUITING NOTES
{SB} = SUBFEED CIRCUIT BREAKER

LOAD TYPE	CONNECTED	DEMAND FACTOR	DEMAND/ADJUSTED
R	0.00	100%	0.00
L	0.00	125%	0.00
M	0.00	100%	0.00
LM	0.00	25%	0.00
N	0.00	100%	0.00
C	0.00	125%	0.00

LOAD TYPE KEY
R = RECEPTACLE, NEC 220.44
L = LTG COMMERCIAL, NEC 220.42
M = MOTOR
LM = LARGEST MOTOR
N = NON-CONTINUOUS
C = CONTINUOUS

PANEL TOTALS

	KVA	AMPS
TOTAL CONNECTED LOAD:	0.00	0.00
TOTAL DEMAND LOAD:	0.00	0.00
SPARE CAPACITY:	28.79	80.00
REQUIRED PANEL CAPACITY:	0.00	0.00

PANEL: MCB-N2P3B3

VOLTS: 208 | PHASE: 3 | INTEGRAL TVSS: NO | BUILDING: RMNC
MOUNTING: SURFACE | WIRE: 4 | ISOL GROUND BUS: NO | LOCATION: RM 406
BUS AMPS: 225 | MLO: YES | FEED-THRU LUGS: NO | POWER SOURCE: NORMAL
MAIN AMPS: 80 | MAIN BREAKER: NO | DOUBLE-LUGS: NO | SUPPLY FROM: MCBN2P4B2A
KAIC RATING: 22 | OCP TYPE: 80% BREAKER

CKT	POLE	AMP	DESCRIPTION	TYPE	A		B		C		TYPE	DESCRIPTION	AMP	POLE	CKT
1	1	20	TELECOM RACK		0.50	0.50						**TELECOM RACK**	20	1	2
3	1	20	TELECOM RACK				0.50	0.50				**TELECOM RACK**	20	1	4
5	1	20	TELECOM RACK						0.50	0.50		**TELECOM RACK**	20	1	6
7	1	20	**TELECOM RACK**		0.50	0.50						**TELECOM RACK**	20	1	8
9	1	20	**TELECOM RACK**				0.50	0.50				**TELECOM RACK**	20	1	10
11	1	20	**TELECOM RACK**						0.50	0.50		TELECOM RACK	20	1	12
13	2	15	HVAC FAN WEST		0.85	0.50						TELECOM RACK	20	1	14
15	2	15	HVAC FAN WEST				0.85	0.50				NAC PANEL 4.1	20	1	16
17	1	20	GEN RECPTS IN ROOM						0.54						18
19	2	15	HVAC FAN EAST		0.85										20
21	2	15	HVAC FAN EAST				0.85								22
23															24
25															26
27															28
29															30
31															32
33															34
35															36
37															38
39															40
41															42
					4.21 KVA		4.21 KVA		2.54 KVA						
					20.22 A		20.22 A		12.21 A						
					38%		38%		23%						

SPECIAL PANEL FEATURES

CIRCUITING NOTES
{SB} = SUBFEED CIRCUIT BREAKER

LOAD TYPE	CONNECTED	DEMAND FACTOR	DEMAND/ADJUSTED
R	0.00	100%	0.00
L	0.00	125%	0.00
M	0.00	100%	0.00
LM	0.00	25%	0.00
N	0.00	100%	0.00
C	0.00	125%	0.00

LOAD TYPE KEY
R = RECEPTACLE, NEC 220.44
L = LTG COMMERCIAL, NEC 220.42
M = MOTOR
LM = LARGEST MOTOR
N = NON-CONTINUOUS
C = CONTINUOUS

PANEL TOTALS

	KVA	AMPS
TOTAL CONNECTED LOAD:	0.00	0.00
TOTAL DEMAND LOAD:	0.00	0.00
SPARE CAPACITY:	28.79	80.00
REQUIRED PANEL CAPACITY:	0.00	0.00

PANEL: MCB-N2P3B3

VOLTS: 208 | PHASE: 3 | INTEGRAL TVSS: NO | BUILDING: RMNC
MOUNTING: SURFACE | WIRE: 4 | ISOL GROUND BUS: NO | LOCATION: RM 406
BUS AMPS: 225 | MLO: YES | FEED-THRU LUGS: NO | POWER SOURCE: NORMAL
MAIN AMPS: 80 | MAIN BREAKER: NO | DOUBLE-LUGS: NO | SUPPLY FROM: MCBNT4B2
KAIC RATING: 22 | OCP TYPE: 80% BREAKER

CKT	POLE	AMP	DESCRIPTION	TYPE	A		B		C		TYPE	DESCRIPTION	AMP	POLE	CKT
1	**3**	**60**	**SPARE**			4.21					**SB**	**PANEL MCB-N2P4B2B**	**100**	**3**	2
3	**3**	**60**	**SPARE**					4.21			**SB**	**PANEL MCB-N2P4B2B**	**100**	**3**	4
5	**3**	**60**	**SPARE**							2.54	**SB**	**PANEL MCB-N2P4B2B**	**100**	**3**	6
7															8
9															10
11															12
13															14
15															16
17															18
19															20
21															22
23															24
25															26
27															28
29															30
31															32
33															34
35															36
37															38
39															40
41															42
					4.21 KVA		4.21 KVA		2.54 KVA						
					20.24 A		20.24 A		12.21 A						
					38%		38%		23%						

SPECIAL PANEL FEATURES
DEMO PANEL FOR RELOCATION/REUSE

CIRCUITING NOTES
{SB} = SUBFEED CIRCUIT BREAKER

LOAD TYPE	CONNECTED	DEMAND FACTOR	DEMAND/ADJUSTED
R	0.00	100%	0.00
L	0.00	125%	0.00
M	0.00	100%	0.00
LM	0.00	25%	0.00
N	0.00	100%	0.00
C	0.00	125%	0.00

LOAD TYPE KEY
R = RECEPTACLE, NEC 220.44
L = LTG COMMERCIAL, NEC 220.42
M = MOTOR
LM = LARGEST MOTOR
N = NON-CONTINUOUS
C = CONTINUOUS

PANEL TOTALS

	KVA	AMPS
TOTAL CONNECTED LOAD:	10.96	30.46
TOTAL DEMAND LOAD:	10.96	30.46
SPARE CAPACITY:	17.83	49.54
REQUIRED PANEL CAPACITY:	10.96	30.46

PANEL: MCB-N4P4B2

VOLTS: 480 | PHASE: 3 | INTEGRAL TVSS: NO | BUILDING: RMNC
MOUNTING: SURFACE | WIRE: 4 | ISOL GROUND BUS: NO | LOCATION: RM 404A
BUS AMPS: 100 | MLO: YES | FEED-THRU LUGS: NO | POWER SOURCE: NORMAL
MAIN AMPS: 70 | MAIN BREAKER: NO | DOUBLE-LUGS: NO | SUPPLY FROM: BUS DUCT
KAIC RATING: 22 | OCP TYPE: 80% BREAKER

CKT	POLE	AMP	DESCRIPTION	TYPE	A		B		C		TYPE	DESCRIPTION	AMP	POLE	CKT
1	**1**	**20**	**LIGHTS NORTHEAST**	**L**											
3	**1**	**20**	**LIGHTS NORTHEAST**	**L**											
5	**1**	**20**	**LIGHTS NORTH**	**L**											
7	**1**	**20**	**LIGHTS SOUTHEAST**	**L**											
9	**1**	**20**	**LIGHTS SOUTH**	**L**							**L**	**LIGHTS SOUTH**	**20**	**1**	**2**
11	**1**	**20**	**LIGHTS EAST**	**L**								**SPARE**	**20**	**1**	**4**
13	**1**	**20**	**SPARE**								**L**	**LIGHTS SOUTHWEST**	**20**	**1**	**6**
15	**1**	**20**	**LIGHTS NORTH**	**L**							**L**	**LIGHTS RESTROOM**	**20**	**1**	**8**
17	**1**	**20**	**SPARE**								**L**	**LOW VOLTAGE XFMR**	**20**	**1**	**10**
19	**3**	**20**	**HVAC B1 LEVEL**	**M**											12
21	**3**	**20**	**HVAC B1 LEVEL**	**M**											14
23	**3**	**20**	**HVAC B1 LEVEL**	**M**											16
															18
											M	**HVAC B1 LEVEL**	**20**	**3**	**20**
											M	**HVAC B1 LEVEL**	**20**	**3**	**22**
											M	**HVAC B1 LEVEL**	**20**	**3**	**24**
					0.00 KVA		0.00 KVA		0.00 KVA						
					0.00 A		0.00 A		0.00 A						
					#DIV/0!		#DIV/0!		#DIV/0!						

SPECIAL PANEL FEATURES

CIRCUITING NOTES
{SB} = SUBFEED CIRCUIT BREAKER

LOAD TYPE	CONNECTED	DEMAND FACTOR	DEMAND/ADJUSTED
R	0.00	100%	0.00
L	0.00	125%	0.00
M	0.00	100%	0.00
LM	0.00	25%	0.00
N	0.00	100%	0.00
C	0.00	125%	0.00

LOAD TYPE KEY
R = RECEPTACLE, NEC 220.44
L = LTG COMMERCIAL, NEC 220.42
M = MOTOR
LM = LARGEST MOTOR
N = NON-CONTINUOUS
C = CONTINUOUS

PANEL TOTALS

	KVA	AMPS
TOTAL CONNECTED LOAD:	0.00	0.00
TOTAL DEMAND LOAD:	0.00	0.00
SPARE CAPACITY:	58.13	70.00
REQUIRED PANEL CAPACITY:	0.00	0.00

Portland State UNIVERSITY
PSU CAPITAL PROJECTS & CONSTRUCTION

RMNC

RICHARD & MAURINE NEUBERGER CENTER

4TH FLOOR SPHR
INTERIOR REMODEL

PSU CAMPUS | BLOCK: 087
1600 SW 4TH AVENUE
PORTLAND, OREGON 97201

ISSUED FOR BID & PERMIT

REGISTERED PROFESSIONAL ENGINEER
101192PE
Joseph Wuest
OREGON
SEPT. 13, 2022
JOSEPH W. WUEST
EXPIRES: 06/30/28

9/4/2026

HALF SIZE WHEN PRINTED AT 11X17

Sheet Title :

PANEL SCHEDULES DEMO

Revisions : *

Date : 07/08/2026

Drawn : JWW | Checked : JWW

Sheet # : **E400**

PANEL: MCB-N2P3B3

VOLTS: 208 | PHASE: 3 | INTEGRAL TVSS: NO
MOUNTING: SURFACE | WIRE: 4 | ISOL GROUND BUS: NO | BUILDING: RMNC
BUS AMPS: 225 | MLO: YES | FEED-THRU LUGS: NO | LOCATION: RM 404A
MAIN AMPS: 100 | MAIN BREAKER: NO | DOUBLE-LUGS: NO | POWER SOURCE: NORMAL
KAIC RATING: 22 | OCP TYPE: 80% BREAKER | SUPPLY FROM: MCBN2P4B3

CKT	POLE	AMP	DESCRIPTION	TYPE	A	B	C	TYPE	DESCRIPTION	AMP	POLE	CKT
1	1	20	425A COPIER						RECPS RM 417	20	1	2
3	1	20	RCPS RM 417						RECPS RM 417	20	1	4
5	1	20	RCPS RM 418						RECPS RM 409C	20	1	6
7	1	20	RECPS SOUTH FURNITURE						RECPS SOUTH FURNITURE	20	1	8
9	1	20	RECPS RM 409B						RM 416 FRIDGE	20	1	10
11	1	20	RM 416 INSTANT HOT						DUAL DUCT BOXES	20	1	12
13	1	20	RECPS RM 418						RM 413	20	1	14
15	1	20	PRINTER FURN SOUTH									16
17	1	20	ADA DOOR OPERATOR									18
19												20
21												22
23												24
25												26
27												28
29												30
31												32
33												34
35												36
37												38
39												40
41												42
SPECIAL PANEL FEATURES					0.00 KVA	0.00 KVA	0.00 KVA	CIRCUITING NOTES				
DEMO PANEL FOR RELOCATION/REUSE					0.00 A	0.00 A	0.00 A	{SB} = SUBFEED CIRCUIT BREAKER				
					#DIV/0!	#DIV/0!	#DIV/0!					

LOAD TYPE	CONNECTED	DEMAND FACTOR	DEMAND/ADJUSTED	LOAD TYPE KEY
R	0.00	100%	0.00	R = RECEPTACLE, NEC 220.44
L	0.00	125%	0.00	L = LTG COMMERCIAL, NEC 220.42
M	0.00	100%	0.00	M = MOTOR
LM	0.00	25%	0.00	LM = LARGEST MOTOR
N	0.00	100%	0.00	N = NON-CONTINUOUS
C	0.00	125%	0.00	C = CONTINUOUS

PANEL TOTALS	KVA	AMPS
TOTAL CONNECTED LOAD:	0.00	0.00
TOTAL DEMAND LOAD:	0.00	0.00
SPARE CAPACITY:	35.98	100.00
REQUIRED PANEL CAPACITY:	0.00	0.00

PANEL: MCB-E4P4B3

VOLTS: 480 | PHASE: 3 | INTEGRAL TVSS: NO
MOUNTING: SURFACE | WIRE: 4 | ISOL GROUND BUS: NO | BUILDING: RMNC
BUS AMPS: 225 | MLO: YES | FEED-THRU LUGS: NO | LOCATION: RM 404A
MAIN AMPS: 40 | MAIN BREAKER: NO | DOUBLE-LUGS: NO | POWER SOURCE: EMERGENCY
KAIC RATING: 22 | OCP TYPE: 80% BREAKER | SUPPLY FROM: PANEL L5 & MCB

CKT	POLE	AMP	DESCRIPTION	TYPE	A	B	C	TYPE	DESCRIPTION	AMP	POLE	CKT
1	1	20	9TH FLOOR LIGHTS	L				L	6TH FLOOR LIGHTS	20	1	2
3	1	20	8TH FLOOR LIGHTS	L				L	5TH FLOOR LIGHTS	20	1	4
5	1	20	7TH FLOOR LIGHTS	L			6.4	L	4TH FLOOR LIGHTS	20	1	6
7	1	20	B2 & B3 CORE LIGHTS	L				L	3RD FLOOR LIGHTS	20	1	8
9	1	20	B2 PARKING LIGHTS & EXITS	L				L	2ND FLOOR LIGHTS	20	1	10
11	1	20	1ST FLOOR LIGHTS	L					SPARE	20	1	12
13	1	20	SPARE						SPARE	20	1	14
15												16
17												18
19												20
21												22
23												24
25												26
27	3	15	SUPPLY FAN #1	M				M	SMOKE EXHAUST #1	15	3	28
29	3	15	SUPPLY FAN #1	M				M	SMOKE EXHAUST #1	15	3	30
31	3	15	SUPPLY FAN #1	M				M	SMOKE EXHAUST #1	15	3	32
33	3	15	SUPPLY FAN #2	M				M	SMOKE EXHAUST #2	15	3	34
35	3	15	SUPPLY FAN #2	M				M	SMOKE EXHAUST #2	15	3	36
37	3	15	SUPPLY FAN #2	M				M	SMOKE EXHAUST #2	15	3	38
SPECIAL PANEL FEATURES					0.00 KVA	0.00 KVA	6.40 KVA	CIRCUITING NOTES				
					0.00 A	0.00 A	13.33 A	{SB} = SUBFEED CIRCUIT BREAKER				
					0%	0%	100%					

LOAD TYPE	CONNECTED	DEMAND FACTOR	DEMAND/ADJUSTED	LOAD TYPE KEY
R	0.00	100%	0.00	R = RECEPTACLE, NEC 220.44
L	6.40	125%	8.00	L = LTG COMMERCIAL, NEC 220.42
M	0.00	100%	0.00	M = MOTOR
LM	0.00	25%	0.00	LM = LARGEST MOTOR
N	0.00	100%	0.00	N = NON-CONTINUOUS
C	0.00	125%	0.00	C = CONTINUOUS

PANEL TOTALS	KVA	AMPS
TOTAL CONNECTED LOAD:	6.40	7.71
TOTAL DEMAND LOAD:	8.00	9.63
SPARE CAPACITY:	25.22	30.37
REQUIRED PANEL CAPACITY:	8.00	9.63

Portland State UNIVERSITY
PSU CAPITAL PROJECTS & CONSTRUCTION

RMNC
RICHARD & MAURINE NEUBERGER CENTER

4TH FLOOR SPHR
INTERIOR REMODEL

PSU CAMPUS | BLOCK: 087
1600 SW 4TH AVENUE
PORTLAND, OREGON 97201

ISSUED FOR BID & PERMIT

REGISTERED PROFESSIONAL ENGINEER
101192PE
Joseph Wuest
OREGON
SEPT. 13, 2022
JOSEPH W. WUEST
EXPIRES: 06/30/28

9/4/2026

HALF SIZE WHEN PRINTED AT 11X17

Sheet Title :

PANEL SCHEDULES DEMO

Revisions : *
Date : 07/08/2026

Drawn : JWW
Checked : JWW

Sheet # : **E401**

PANEL: MCB-N2P3B3

VOLTS: 208 | PHASE: 3 | INTEGRAL TVSS: NO | BUILDING: RMNC
MOUNTING: SURFACE | WIRE: 4 | ISOL GROUND BUS: NO | LOCATION: RM 305
BUS AMPS: 225 | MLO: NO | FEED-THRU LUGS: NO | POWER SOURCE: NORMAL
MAIN AMPS: 125 | MAIN BREAKER: YES | DOUBLE-LUGS: NO | SUPPLY FROM: MCB-NT3B3
KAIC RATING: 22 | OCP TYPE: 80% BREAKER

CKT	POLE	AMP	DESCRIPTION	TYPE	A	B	C	TYPE	DESCRIPTION	AMP	POLE	CKT
1	1	20	LOBBY CANS & BATH RECPS						CLASS RECPS	20	1	2
3	1	20	GEN RECPS						CLASS RECPS	20	1	4
5	1	20	LOCKER RM RCPS						CLASS RECPS	20	1	6
7	1	20	SE OFFICE RECPS						CLASS RECPS	20	1	8
9	1	20	SE OFFICE RECPS						FAX/PRINTER RECPS	20	1	10
11	1	20	SE OFFICE RECPS						COPIER RECPS	20	1	12
13	2	20	MICROWAVE						GENERAL RECPS	20	1	14
15	2	20	MICROWAVE						VENDING MACHINE	20	1	16
17	2	20	MICROWAVE						VENDING MACHINE	20	1	18
19	2	20	MICROWAVE						VENDING MACHINE	20	1	20
21	2	20	MICROWAVE						VENDING MACHINE	20	1	22
23	2	20	MICROWAVE						TRAINING RM FLOOR PEDS	20	1	24
25	1	20	VENDING MACHINE						TRAINING RM FLOOR PEDS	20	1	26
27	1	20	VENDING MACHINE						TRAINING RM FLOOR PEDS	20	1	28
29	1	30	ICE MACHINE						TRAINING RM FLOOR PEDS	20	1	30
31	1	20	EXERCISE RM						POWER POLE SOUTH END	20	1	32
33	1	20	ELECTRIC RM RECPS						FIRE ALARM STROBE PANEL	20	1	34
35			METERED DATA	C	10.09							36
37			METERED DATA	C		9.38						38
39			METERED DATA	C			7.66					40
41			METERED DATA	C								42
SPECIAL PANEL FEATURES					10.09 KVA	9.38 KVA	7.66 KVA	CIRCUITING NOTES				
PROVIDE HINGED COVER & MAIN BREAKER					48.50 A	45.09 A	36.82 A	{SB} = SUBFEED CIRCUIT BREAKER				
					37%	35%	28%	METERED DATA FROM 08/17/2026 THRU 09/17/2026				

LOAD TYPE	CONNECTED	DEMAND FACTOR	DEMAND/ADJUSTED	LOAD TYPE KEY
R	0.00	100%	0.00	R = RECEPTACLE, NEC 220.44
L	0.00	125%	0.00	L = LTG COMMERCIAL, NEC 220.42
M	0.00	100%	0.00	M = MOTOR
LM	0.00	25%	0.00	LM = LARGEST MOTOR
N	0.00	100%	0.00	N = NON-CONTINUOUS
C	27.12	125%	33.91	C = CONTINUOUS

PANEL TOTALS	KVA	AMPS
TOTAL CONNECTED LOAD:	27.12	75.38
TOTAL DEMAND LOAD:	33.91	94.23
SPARE CAPACITY:	11.07	30.77
REQUIRED PANEL CAPACITY:	33.91	94.23

PANEL: MCB-N4P4B2

VOLTS: 480 | PHASE: 3 | INTEGRAL TVSS: NO | BUILDING: RMNC
MOUNTING: SURFACE | WIRE: 4 | ISOL GROUND BUS: NO | LOCATION: RM 404A
BUS AMPS: 100 | MLO: NO | FEED-THRU LUGS: NO | POWER SOURCE: NORMAL
MAIN AMPS: 100 | MAIN BREAKER: YES | DOUBLE-LUGS: NO | SUPPLY FROM: BUS DUCT
KAIC RATING: 22 | OCP TYPE: 80% BREAKER

CKT	POLE	AMP	DESCRIPTION	TYPE	A	B	C	TYPE	DESCRIPTION	AMP	POLE	CKT
1	1	20	NW QUADRANT LTS	L	1.07 0.80			L	NE QUADRANT LTS	20	1	2
3	1	20	RMS 460, 461 & NW HALL LTS	L		0.91 0.58		L	RM 428, ELE LOBBY, & NE HALL LTS	20	1	4
5	1	20	SW QUADRANT OFFICE/HALL LTS	L			0.70 0.50	L	SE QUADRANT OFFICE/HALL/KITCH LTS	20	1	6
7	1	20	SW QUADRANT LAB/HALL/REST LTS	L	0.55 0.68			L	SE QUADRANT LAB/REST/OFFICE LTS	20	1	8
9												10
11												12
13	3	20	HVAC B1 LEVEL	M	2.22 11.04			SB	MCBN2P4B3	60	3	14
15	3	20	HVAC B1 LEVEL	M		2.22 11.42		SB	MCBN2P4B3	60	3	16
17	3	20	HVAC B1 LEVEL	M			2.22 9.99	SB	MCBN2P4B3	60	3	18
SPECIAL PANEL FEATURES					16.36 KVA	15.13 KVA	13.41 KVA	CIRCUITING NOTES				
PROVIDE HINGED COVER & MAIN BREAKER					34.08 A	31.51 A	27.93 A	{SB} = SUBFEED CIRCUIT BREAKER				
					36%	34%	30%					

LOAD TYPE	CONNECTED	DEMAND FACTOR	DEMAND/ADJUSTED	LOAD TYPE KEY
R	0.00	100%	0.00	R = RECEPTACLE, NEC 220.44
L	5.79	125%	7.24	L = LTG COMMERCIAL, NEC 220.42
M	6.65	100%	6.65	M = MOTOR
LM	0.00	25%	0.00	LM = LARGEST MOTOR
N	0.00	100%	0.00	N = NON-CONTINUOUS
C	0.00	125%	0.00	C = CONTINUOUS

PANEL TOTALS	KVA	AMPS
TOTAL CONNECTED LOAD:	44.89	54.06
TOTAL DEMAND LOAD:	46.34	55.80
SPARE CAPACITY:	36.70	44.20
REQUIRED PANEL CAPACITY:	46.34	55.80

PANEL: MCB-N2P4B2

VOLTS: 208 | PHASE: 3 | INTEGRAL TVSS: NO | BUILDING: RMNC
MOUNTING: SURFACE | WIRE: 4 | ISOL GROUND BUS: NO | LOCATION: RM 406
BUS AMPS: 225 | MLO: YES | FEED-THRU LUGS: NO | POWER SOURCE: NORMAL
MAIN AMPS: 160 | MAIN BREAKER: NO | DOUBLE-LUGS: NO | SUPPLY FROM: MCB-NT4B2
KAIC RATING: 22 | OCP TYPE: 80% BREAKER

CKT	POLE	AMP	DESCRIPTION	TYPE	A	B	C	TYPE	DESCRIPTION	AMP	POLE	CKT
1	1	20	DEDICATED RACK PLUG	R	0.50 0.50			R	RM 465 & 466 PROJECTORS	20	1	2
3	1	20	DEDICATED RACK PLUG	R		0.50 0.90		R	NORTHWEST WALL WREMOLD	20	1	4
5	1	20	DEDICATED RACK PLUG	R			0.50 1.08	R	NORTHWEST WALL WREMOLD	20	1	6
7	1	20	RECPS RMS 466, 411	R	0.9 0.72			R	RECPS RM 464	20	1	8
9	1	20	RECPS RMS 466, 465	R		1.26 1.26		R	RECPS RMS 406, 468, 412, ECLYPSE	20	1	10
11	1	20	RECPS RM 465	R			0.90 0.50	R	DEDICATED RACK PLUG	20	1	12
13	2	15	HVAC FAN	M	0.85 0.50			R	DEDICATED RACK PLUG	20	1	14
15	2	15	HVAC FAN	M		0.85 0.5		R	NAC PANEL 4.1	20	1	16
17	1	20	RECPS RM 463	R			1.08 1.08	R	RECPS RM 413, 414	20	1	18
19	1	20	RECPS RMS 416, 417, 418	R	1.08 1.08			R	RECPS RMS 419, 420, 421	20	1	20
21	1	20	RECPS RMS 410, 415	R		0.54 1.26		M	RECPS RMS 422, 423, 426	20	1	22
23	1	20	RECPS RM 409	R			1.44 0.18	R	CONDENSATE PUMP RM 406	20	1	24
25	1	20	DISCONNECT RM 424	N	1.92 1.26			R	RECPS RMS 467	20	1	26
27	1	20	RECPS RM 427 TV & SVC DESK	R		0.90 0.18		C	ACCESS CONTROL PANEL	20	1	28
29	1	20	RECPS RMS C412, 424, 425	R			1.08 1.08	R	RECPS RM 431, 431A	20	1	30
SPECIAL PANEL FEATURES					9.31 KVA	8.15 KVA	8.92 KVA	CIRCUITING NOTES				
					44.77 A	39.20 A	42.88 A	{SB} = SUBFEED CIRCUIT BREAKER				
					35%	31%	34%					

LOAD TYPE	CONNECTED	DEMAND FACTOR	DEMAND/ADJUSTED	LOAD TYPE KEY
R	21.32	100%	21.32	R = RECEPTACLE, NEC 220.44
L	0.00	125%	0.00	L = LTG COMMERCIAL, NEC 220.42
M	2.97	100%	2.97	M = MOTOR
LM	0.00	25%	0.00	LM = LARGEST MOTOR
N	1.92	100%	1.92	N = NON-CONTINUOUS
C	0.18	125%	0.23	C = CONTINUOUS

PANEL TOTALS	KVA	AMPS
TOTAL CONNECTED LOAD:	26.39	73.33
TOTAL DEMAND LOAD:	26.43	73.45
SPARE CAPACITY:	31.14	86.55
REQUIRED PANEL CAPACITY:	26.43	73.45

PANEL: MCB-N2P4B3

VOLTS: 208 | PHASE: 3 | INTEGRAL TVSS: NO | BUILDING: RMNC
MOUNTING: SURFACE | WIRE: 4 | ISOL GROUND BUS: NO | LOCATION: RM 404A
BUS AMPS: 225 | MLO: NO | FEED-THRU LUGS: NO | POWER SOURCE: NORMAL
MAIN AMPS: 125 | MAIN BREAKER: YES | DOUBLE-LUGS: NO | SUPPLY FROM: MCB-NT4B3
KAIC RATING: 22 | OCP TYPE: 80% BREAKER

CKT	POLE	AMP	DESCRIPTION	TYPE	A	B	C	TYPE	DESCRIPTION	AMP	POLE	CKT
1	1	20	RM 460 MICROWAVE B	R	1.00 0.50			R	RM 460 FRIDGE	1	20	2
3	1	20	RM 460 MICROWAVE B	R		1.00 0.90		R	RECPS RM 460 COUNTERS	1	20	4
5	1	20	RM 460 MICROWAVE B	R			1.00 1.00	R	RM 460 INSTA-HOT	1	20	6
7	1	20	RECPS RMS 405, 404A, 404, C423	R	0.90 0.54			R	RECPS RMS 428, C422, 403	1	20	8
9	1	20	RECPS RMS 461, 460, 462	R		1.26 0.02		N	RM 404A TU XFMR	1	20	10
11	1	20	RM 456 DISCONNECT	N			1.92 0.03	N	RM 403 FSD	1	20	12
13	1	20	RECPS RMS 454, 455A, 455B	R	1.26 1.26			R	RECPS RMS 430B, 456, C420	1	20	14
15	1	20	RECPS RMS 452, 453	R		1.08 1.26		R	RECPS RMS 446, C419	1	20	16
17	1	20	RECPS RMS 450, 451	R			1.08 0.72	R	RECPS RM 449	1	20	18
19	1	20	RECPS RMS 447, 448	R	1.08 1.08			R	RECPS RM 444	1	20	20
21	1	20	RECPS RMS 443, 445	R		1.08 1.26		R	RECPS RMS 442, C418	1	20	22
23	1	20	RECPS RMS 439, 441	R			1.08 1.08	R	RECPS RM 440	1	20	24
25	1	20	RECPS RMS 437, 438	R	1.44 1.26			R	RECPS RMS 432, C417	1	20	26
27	1	20	RECPS RMS 435, 436	R		1.08 1.08		R	RECPS RMS 430, 430A	1	20	28
29	1	20	RECPS RMS C415, 433, 434	R			1.08 1.00	R	RM 433 INSTA-HOT	1	20	30
31	1	20	RECPS RMS 433,C415 CNTRS	R	0.54 0.18			N	RM 428 AUTO-OPENER	1	20	32
33	1	20	RM 433 FRIDGE	R		0.50 0.90		R	RECPS RM 428 & ACCENT WALL	1	20	34
35												36
37												38
39												40
41												42
SPECIAL PANEL FEATURES					11.04 KVA	11.42 KVA	9.99 KVA	CIRCUITING NOTES				
RELOCATED PANEL FROM ELSEWHERE ON FLOOR					53.08 A	54.90 A	48.03 A	{SB} = SUBFEED CIRCUIT BREAKER				
REQUIRES NEW MAIN BREAKER					34%	35%	31%					

LOAD TYPE	CONNECTED	DEMAND FACTOR	DEMAND/ADJUSTED	LOAD TYPE KEY
R	30.30	100%	30.30	R = RECEPTACLE, NEC 220.44
L	0.00	125%	0.00	L = LTG COMMERCIAL, NEC 220.42
M	0.00	100%	0.00	M = MOTOR
LM	0.00	25%	0.00	LM = LARGEST MOTOR
N	2.15	100%	2.15	N = NON-CONTINUOUS
C	0.00	125%	0.00	C = CONTINUOUS

PANEL TOTALS	KVA	AMPS
TOTAL CONNECTED LOAD:	32.45	90.18
TOTAL DEMAND LOAD:	32.45	90.18
SPARE CAPACITY:	12.53	34.82
REQUIRED PANEL CAPACITY:	32.45	90.18

Portland State UNIVERSITY
PSU CAPITAL PROJECTS & CONSTRUCTION

RMNC

RICHARD & MAURINE NEUBERGER CENTER

4TH FLOOR SPHR
INTERIOR REMODEL

PSU CAMPUS | BLOCK: 087
1600 SW 4TH AVENUE
PORTLAND, OREGON 97201

ISSUED FOR BID & PERMIT

REGISTERED PROFESSIONAL ENGINEER
101192PE
Joseph Wuest
OREGON
SEPT. 13, 2022
JOSEPH W. WUEST
EXPIRES: 06/30/28

9/4/2026

HALF SIZE WHEN PRINTED AT 11X17

Sheet Title :

PANEL SCHEDULES INSTALL

Revisions : *

Date : 08/21/2026

Drawn : JWW | Checked : JWW

Sheet # : **E402**

PANEL: MCB-E4P4B3

VOLTS:	480	**PHASE:** 3	**INTEGRAL TVSS:**	NO	
MOUNTING:	SURFACE	**WIRE:** 4	**ISOL GROUND BUS:**	NO	**BUILDING:** RMNC
BUS AMPS:	225	**MLO:** NO	**FEED-THRU LUGS:**	NO	**LOCATION:** RM 404A
MAIN AMPS:	40	**MAIN BREAKER:** YES	**DOUBLE-LUGS:**	NO	**POWER SOURCE:** EMERGENCY
KAIC RATING:	22		**OCP TYPE:**	80% BREAKER	**SUPPLY FROM:** PANEL L5 & MCB

CKT	POLE	AMP	DESCRIPTION	TYPE	A		B		C		TYPE	DESCRIPTION	AMP	POLE	CKT
1	1	20	B2 & B3 CORE LIGHTS	L							L	B2 PARKING LIGHTS & EXITS	20	1	2
3	1	20	1ST FLOOR LIGHTS	L								SPARE	20	1	4
5	1	20	2ND FLOOR LIGHTS	L								SPARE	20	1	6
7	1	20	3RD FLOOR LIGHTS	L								SPARE	20	1	8
9	1	20	4TH FLOOR LIGHTS (NORTH)	L			1.55	1.00			L	4TH FLOOR LIGHTS (SOUTH)	20	1	10
11	1	20	5TH FLOOR LIGHTS	L								SPARE	20	1	12
13	1	20	6TH FLOOR LIGHTS	L								SPARE	20	1	14
15	1	20	7TH FLOOR LIGHTS	L								SPARE	20	1	16
17	1	20	8TH FLOOR LIGHTS	L								SPARE	20	1	18
19	1	20	9TH FLOOR LIGHTS	L								SPARE	20	1	20
21															22
23															24
25															26
27															28
29															30
31	3	15	SUPPLY FAN #1	M							M	SMOKE EXHAUST #1	15	3	32
33	3	15	SUPPLY FAN #1	M							M	SMOKE EXHAUST #1	15	3	34
35	3	15	SUPPLY FAN #1	M							M	SMOKE EXHAUST #1	15	3	36
37	3	15	SUPPLY FAN #2	M							M	SMOKE EXHAUST #2	15	3	38
39	3	15	SUPPLY FAN #2	M							M	SMOKE EXHAUST #2	15	3	40
41	3	15	SUPPLY FAN #2	M							M	SMOKE EXHAUST #2	15	3	42

SPECIAL PANEL FEATURES

PROVIDE HINGED COVER & MAIN BREAKER

0.00 KVA	2.55 KVA	0.00 KVA
0.00 A	5.31 A	0.00 A
0%	100%	0%

CIRCUITING NOTES

{SB} = SUBFEED CIRCUIT BREAKER

LOAD TYPE	CONNECTED	DEMAND FACTOR	DEMAND/ADJUSTED
R	0.00	100%	0.00
L	2.55	125%	3.19
M	0.00	100%	0.00
LM	0.00	25%	0.00
N	0.00	100%	0.00
C	0.00	125%	0.00

LOAD TYPE KEY

R = RECEPTACLE, NEC 220.44
L = LTG COMMERCIAL, NEC 220.42
M = MOTOR
LM = LARGEST MOTOR
N = NON-CONTINUOUS
C = CONTINUOUS

PANEL TOTALS

	KVA	AMPS
TOTAL CONNECTED LOAD:	2.55	3.07
TOTAL DEMAND LOAD:	3.19	3.84
SPARE CAPACITY:	30.03	36.16
REQUIRED PANEL CAPACITY:	3.19	3.84

Portland State UNIVERSITY
PSU CAPITAL PROJECTS & CONSTRUCTION

RMNC
RICHARD & MAURINE NEUBERGER CENTER

4TH FLOOR SPHR
INTERIOR REMODEL

PSU CAMPUS | BLOCK: 087
1600 SW 4TH AVENUE
PORTLAND, OREGON 97201

ISSUED FOR BID & PERMIT

REGISTERED PROFESSIONAL ENGINEER
101192PE
Joseph Wuest
OREGON
SEPT. 13, 2022
JOSEPH W. WUEST
EXPIRES: 06/30/28

9/4/2026

HALF SIZE WHEN PRINTED AT 11X17

Sheet Title :

PANEL SCHEDULES INSTALL

Revisions :	Date :
*	07/08/2026

Drawn : JWW Checked : JWW

Sheet # : **E403**

DETAIL NOTES:

A. REFER TO DIVISION 26 SPECIFICATIONS FOR APPROVED MANUFACTURERS FOR HARDWIRED RECEPTACLE CONTROL.

B. WHERE AN ENTIRE DUPLEX RECEPTACLE IS CONTROLLED BY SENSOR, LOCATE AN UNSWITCHED DUPLEX RECEPTACLE NO FURTHER THAN SIX FEET AWAY.

C. FOR EACH ROOM, PROVIDE QUANTITIES OF RELAY MODULES AND WRITING TO SUPPORT SWITCHED POWER OUTLETS ON POWER DRAWINGS, AND PROVIDE FUNCTIONALITY DESCRIBED IN SPECIFICATIONS AND/OR LIGHTING SEQUENCE OF OPERATIONS.

D. CONTROLLER, RELAY MODULES, AND DEVICES LOCATED IN PLENUM SPACES MUST BE UL 2043 LISTED. USE PLENUM RATED WIRING WHERE ROUTING IS EXPOSED IN PLENUM SPACES.

E. CONTROLLED RECEPTACLES SHALL COMPLY WITH SECTION 8.4.2 OF ASHRAE 90.1.2022.

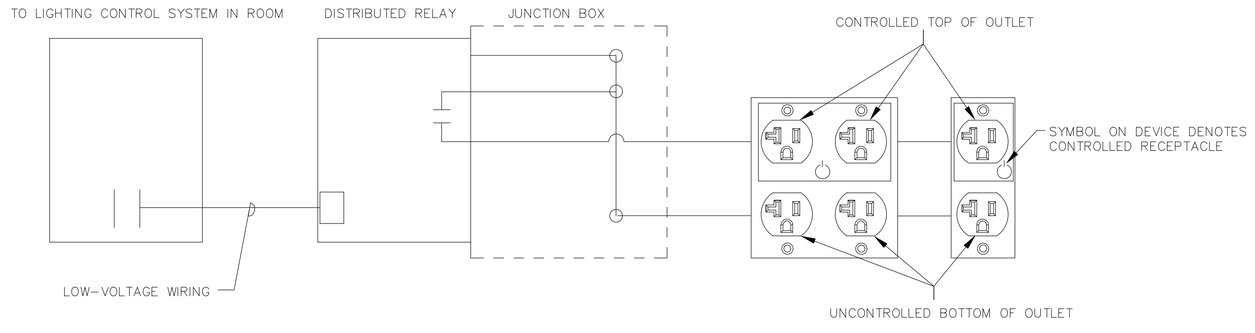

1 CONTROLLED RECEPTACLE WIRING DIAGRAM

Portland State UNIVERSITY
PSU CAPITAL PROJECTS & CONSTRUCTION

RMNC

RICHARD & MAURINE NEUBERGER CENTER

4TH FLOOR SPHR
INTERIOR REMODEL

PSU CAMPUS | BLOCK: 087
1600 SW 4TH AVENUE
PORTLAND, OREGON 97201

ISSUED FOR BID & PERMIT

REGISTERED PROFESSIONAL ENGINEER
101192PE
Joseph Wuest
OREGON
SEPT. 13, 2022
JOSEPH W. WUEST
EXPIRES: 06/30/28

9/4/2026

HALF SIZE WHEN PRINTED AT 11X17

Sheet Title :

DETAILS

Revisions :	Date :
*	07/24/2026

Drawn : JWW Checked : JWW

Sheet # : **E500**